24" Under-Counter Dishwasher

LSPU8653X
Universal
86 cm



Features

Planetarium Wash System - Full and deep wash coverage thanks to the advanced movement of the spray arm, an innovation patented by Smeg

FlexiDuo - The flexible third basket provides additional space, adapting to the load to accommodate various types of dishes, ensuring optimal organization and efficient use of interior capacity

Flood protection system - Enhanced protection and peace of mind with Total Aqua Stop, an advanced leak detection system that automatically shuts off the water supply if a leak is detected beneath the drum or within the water intake hose

Extra Glide Telescopic Guides - Smoother and more stable loading and unloading operations

DELAY START - Improved flexibility and convenience with the Delay Start option, which allows cycles to be scheduled up to 24 hours in advance

General information

Number of place settings	13

Technical Features

Motor	Single phase
Display type	OLED
End-of-cycle indicator	On display, with acoustic signal
Washing system	Planetarium
Turbidity sensor Aquatest	Yes
Flood protection system	Total Aquastop
Drying system	Dry Assist
Water softener	With electronic setting
Hinges	Self-balancing with variable hinges

Programs

Number of programs	10+1
Express	Yes
Delicates	Yes
Crystal & China	Yes
Eco express	Yes
Auto	Yes

Options

Delay start	Up to 24 hours
FlexiZone half-load option	Yes

Baskets

N° baskets	3, FlexiDuo
Cutlery basket	Yes
Upper basket height adjustment	On 3 levels
Lower basket with anti-drip inserts	Yes

Performance / Energy Label

Noise level	44 dB(A) re 1 pW
Energy Star	Yes

Electrical Connection

Current	10 A
Voltage	110-120 V
Frequency	60 Hz
Power Cord Length	140 "
Plug	(A) USA & Mexico

Logistic Information

Depth	22 7/16 "
Width	23 9/16 "
Height	32 3/16 "
Packaged depth	26 3/8 "
Packaged width	25 9/16 "
Packaged height	35 1/16 "
Gross weight	121 lbs

Product dimension drawing

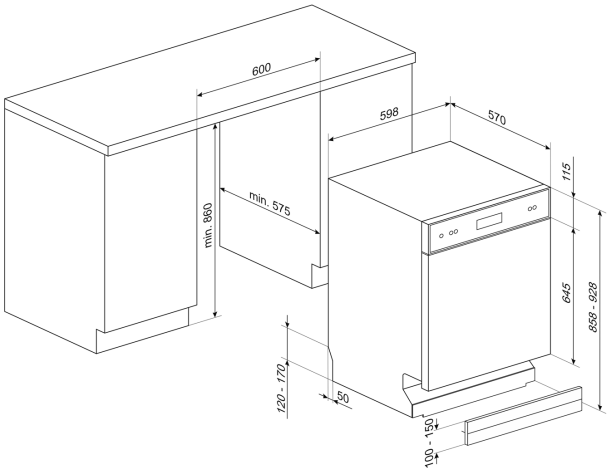

Accessories



KITPL60B

White toe kick adjustable in height and depth for underbenck dishwashers



KITPL60N

Black toe kick adjustable in height and depth for underbenck dishwashers



KITPL60X

Stainless steel toe kick adjustable in height and depth for underbenck dishwashers