Universal Bottom mount Refrigerator

RBMU36LX
Stainless Steel
Built-in



Semi-professional refrigerator of premium quality and large dimensions for the home environment. The most advanced technologies are combined with Smeg's elegant design to guarantee maximum refrigeration performance together with intelligent functions

Features

Adjustable space for every need - Adjustable shelves and door bins adapt easily to any requirement. They can easily be moved up or down, allowing a simple, quick, and functional organization of food.

Automatic ice maker with direct water connection - Constant ice availability thanks to the automatic ice maker, directly connected to the water supply for effortless and uninterrupted production

Multizone (variable temperature compartment) - The Multizone system isolates a freezer compartment with adjustable temperature independent of the main compartment, to gives maximum storage flexibility

Inverter compressor - Inverter compressor reduces noise and vibration levels for a quiet and comfortable kitchen environment

General information

Installation	Built-in
Category	Bottom mount
Hinge position	Left
Reversible door	No
No-frost system	Total
Defrost	Automatic

Aesthetic

Aesthetics	Universal
Material	Steel
Color	Stainless Steel
Display	TFT
Display position	Internal (on top)

Refrigerator compartment features

No. of adjustable shelves	3
Number of fruit and vegetables drawers	1
Refrigerator lighting	LED
Low temperature compartment	Yes
Shelves material	Glass
Number of compartments	2

Refrigerator Inner Door

Number of adjustable door shelves	3

Freezer features

Number of drawers	1

Other Freezer features

Ice maker	Automatic
Ice Maker Location	Internal

Other technical features

MultiZone	Yes
Display functions	Holiday, Fast-cooling, ECO, Temperature alarm, Showroom mode, Sabbath
No. of compressors	2
Compressor type	Inverter
Refrigerant gas type	R600a

Logistic Information

Depth without handle	24 7/16 "
Depth with door open at 90°	58 9/16 "
Width	35 7/8 "
Height	83 7/16 "
Packaged depth	29 3/4 "
Packaged width	37 3/8 "
Packaged height	89 "
Gross weight	518 lbs

Performance / Energy Label

Total net volume	15.0 cu. ft.
Freezer volume	4.6 cu. ft.
Refrigerator volume	15.0 cu. ft.
Annual energy consumption	580 kWh/year

Product dimension drawing

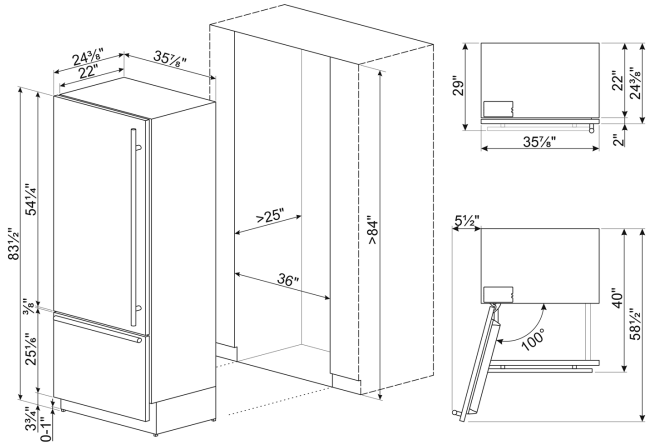

Electrical Connection

Voltage (V)	115 V
Frequency (Hz)	60 Hz
Current	3.5 A
Plug	(B) NEMA 5-15P
Power cord length	78 3/4 "