# Professional Range 30"

SPR30UGGAN
Stainless Steel
Full Gas



Compact- design range with gas oven and gas cooktop: efficient and responsive, the visible heat source allows total control and choice of the right intensity.

## Features

**Touch control** - Easy and intuitive timer setting with a single touch

**Tangential cooling** - New cooling system with tangential fan and airflow from the door to the splashback

**Gas hob** - Gas provides permanent control of the heat source and the temperature change is immediate

**Soft close** - The door is equipped with a specific system for silent closing

## Cooktop technical features

| | |
|---|---|
| Cooking zones | 4 |
| Front-left - 12000 BTU<br>Rear-left - 10000 BTU<br>Rear-right - 10000 BTU<br>Front-right - 18000 BTU | |
| Automatic gas ignition | Yes |
| Gas safety valves | Yes |

## Aesthetic

| | |
|---|---|
| Series | Professional |
| Color | Stainless Steel |

## General information

| | |
|---|---|
| Range size | 30" |
| Range type | Full Gas |

## Programs / Functions

| | |
|---|---|
| No. of cooking functions | 3 |

## Main oven options

| | |
|---|---|
| Minimum Temperature | 250 °F |
| Maximum temperature | 500 °F |

## Main Oven Technical Features

| | |
|---|---|
| Volume | 4.56 cu. ft. |
| Cavity material | EverClean enamel |
| No. of shelves | 6 |
| Total no. of door glasses | 3 |
| Soft Close system | Yes |

## Included accessories

| | |
|---|---|
| Oven wire rack | 2 |

## Electrical Connection

| | |
|---|---|
| Voltage | 120 V |
| Frequency | 60 Hz |

## Logistic Information

| | |
|---|---|
| Width | 29 15/16 " |
| Depth | 26 " |
| Height | 34 13/16 " |
| Net weight | 204 lbs |

## Product dimension drawing

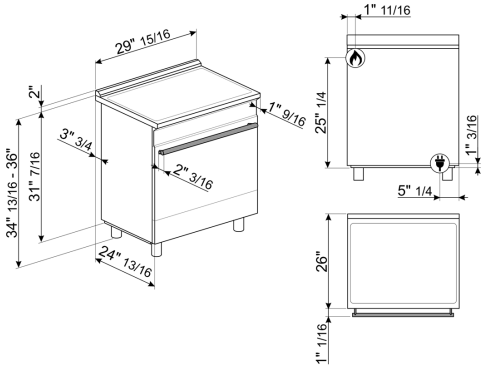


## Accessories



GRM

Coffee machine support



GT3T

Total-extraction telescopic guides



KITTKSPR30

Plinth, 3 sides, 900mm , SPR cookers 30'', black



PALPZ

Pizza shovel with fold away handle



WOKGHU

Cast-iron wok support

## Color option



SPR30UGGX
Color: Stainless Steel