A10G002PTX

Cooker size	100x60 cm
N. of cavities with energy label	2
Cavity heat source	Electric
Hob type	Gas
Type of main oven	Thermo-ventilated
Type of second oven	Static
Cleaning system main oven	Vapor Clean, Pyrolytic
EAN code	8017709359614
Energy efficiency class	A
Energy efficiency class, second cavity	A



Aesthetics

Command panel finish	Finger friendly stainless steel	**Controls colour**	Stainless steel
Aesthetics	Classic	**No. of controls**	8
Logo	Assembled st/steel	**Serigraphy colour**	Black
Colour	Stainless steel	**Display**	Touch
Logo position	Facia below the oven	**Door**	With 2 horizontal strips
Upstand	Yes	**Glass type**	dark grey
Series	Opera	**Handle**	Smeg Opera Classic
Hob colour	Stainless steel	**Handle Colour**	Brushed stainless steel
Type of pan stands	Cast Iron	**Storage compartment**	Door
Type of control setting	Control knobs	**Feet**	Silver
Control knobs	Smeg Classic		

Programs / Functions

No. of cooking functions	9

Traditional cooking functions

Static

Fan assisted bottom + Vapor clean

Fan assisted

Circulaire

Turbo (circulaire + bottom + upper + fan)

ECO

Small grill

Large grill

Fan grill (large)

Other functions

BBQ

Pizza

Airfry

Cleaning functions

Pyrolytic

Vapor Clean

Programs / Functions Auxiliary Oven

Cooking functions cavity 2 4

Bottom element + Upper element

Traditional cooking functions, cavity 2

Static

Small grill

Large grill

Bottom

Hob technical features

UR

Total no. of cook zones 6

Front left - Gas - 2UR (dual) - 4.20 kW
Rear left - Gas - AUX - 1.00 kW
Front centre - Gas - AUX - 1.00 kW
Rear centre - Gas - Semi Rapid - 1.80 kW
Front right - Gas - Semi Rapid - 1.80 kW
Rear right - Gas - Rapid - 3.00 kW

Type of gas burners	Standard	**Gas safety valves**	Yes
Automatic electronic ignition	Yes	**Burner caps**	Matte black enamelled

Main Oven Technical Features

No. of lights	1
Fan number	1
Net volume of the cavity	70 litres
Gross volume, 1st cavity	79 l
Cavity material	Easy clean enamel
Shelf positions	5
Type of shelves	Metal racks
Light type	Halogen
Light power	40 W
Cooking time setting	Start and Stop
Light when oven door is open	Yes
Door opening	Flap down
Removable door	Yes
Full glass inner door	Yes
Removable inner door	Yes

Total no. of door glasses	4
No.of thermo-reflective door glasses	3
Safety Thermostat	Yes
Heating suspended when door is opened	Yes
Cooling system	Tangential
Door Lock During Pyrolisis	Yes
Usable cavity space dimensions (HxWxD)	360X460X425 mm
Temperature control	Electro-mechanical
Lower heating element power	1200 W
Upper heating element - Power	1000 W
Grill elememt	1700 W
Large grill - Power	2700 W
Circular heating element - Power	2000 W
Grill type	Electric
Soft Close system	Yes

Options Main Oven

Timer	Yes
End of cooking acoustic alarm	Yes

Minimum Temperature	50 °C
Maximum temperature	260 °C

Second Oven Technical Features



Net volume of the second cavity	35 litres
Gross volume, 2nd cavity	36 l
Cavity material	Easy clean enamel
Shelf positions	4
Type of shelves	Metal racks
No. of lights	1
Light type	Incandescent
Light power	25 W
Door opening	Flap down
Removable door	Yes
Full glass inner door	Yes
Removable inner door	Yes

No. total door glasses	3
No. thermo-reflective door glasses	1
Safety Thermostat	Yes
Cooling system	Tangential
Usable cavity space dimensions (HxWxD)	311x206x418 mm
Temperature control	Electro-mechanical
Lower heating element - power	700 W
Upper heating element - Power	600 W
Grill element - power	1300 W
Large grill - Power	1900 W
Grill type	Electric
Soft Close system	Yes

Options Auxiliary Oven

Minimum Temperature	50 °C	**Maximum temperature**	245 °C

Accessories included for Main Oven & Hob

Chrome shelf with back and side stop	2	**Telescopic Guide rails, partial Extraction**	1
40mm deep tray	1	**Meat Probe**	1
Grill mesh	1		

Accessories included for Secondary Oven

Chrome shelf with back and side stop	1	**Grill mesh**	1
Wide baking tray	1		

Electrical Connection

Max Power Draw	4400 W	**Additional connection modalities**	Yes, Double and Three Phase
Current	20 A	**Frequency**	50/60 Hz
Voltage	220-240 V	**Terminal block**	5 poles
Voltage 2 (V)	380-415 V	**Plug**	No
Type of electric cable	Yes, Single phase		

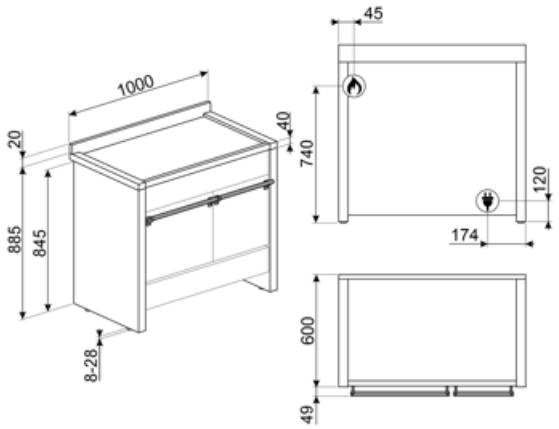

Compatible Accessories



AIRFRY2

Air fryer tray. Ideal for recreating traditional frying in the oven, but with fewer calories and less fat. It allows you to cook quickly and simply dishes such as French fries, fried vegetables and fish, ensuring perfect browning and crispiness.



BN620-1

Enamelled tray, 20mm deep



BNP608T

Teflon-coated tray, 8mm depth, to be placed on the grid



GTT

Totally extractable telescopic guides (1 level) Extraction: 433 mm Material: Stainless steel AISI 430 polished

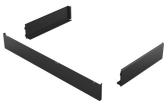

KITH900CPF9

Height extension kit, suitable for 90 cookers (codes starting CPF9, CPF92 and C92)



SFLK1

Child lock



TPKPLATE

Universal plate for induction, gas, ceramic and electric hobs. Non-stick surface ideal for cooking fish, eggs and vegetables. Dimensions: 410 X 240 mm.



BBQ

Double sided plate BBQ. Suitable for recreating succulent and crispy dishes in the oven with the typical taste of grilled cooking. The ribbed side is particularly suitable for meats and cheeses. The smooth side for fish, seafood and vegetables.



BN640

Enamelled tray, 40mm deep



GTP

Partially extractable telescopic guides (1 level) Extraction: 300 mm Material: Stainless steel AISI 430 polished



KIT600C92PX

Cover strip for hob back side, suitable for 90cm Symphony cooker with pyro oven



PALPZ

Pizza shovel with fold away handle width: 315mm length : 325mm

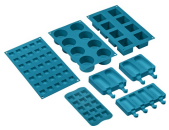

SMOLD

Set of 7 silicone moulds for ice creams, ice lollies, pralines, ice cubes or to portion food. Usable from -60°C to +230°C

Symbols glossary



Heavy duty cast iron pan stands: for maximum stability and strength.



Installation in column: Installation in column



Triple glazed doors: Number of glazed doors.



Enamel interior: The enamel interior of all Smeg ovens have a special antacid lining which helps keep the interior clean by reducing the amount of cooking grease adhering to it.



Fan with upper and lower elements: The elements combined with the fan aim to provide more uniform heat, a similar method to conventional cooking, so pre-heat is required. Most suitable for items requiring slow cooking methods.



Upper and lower element only: a traditional cooking method best suited for single items located in the centre of the oven. the top pf the oven will always be hottest. Ideal for roast, fruit cakes, bread etc.



Lower heating element only: This function is ideal for foods that require extra base temperature without browning, e.g. pastry dishes, pizza. Also suitable for slow cooking of stews and casseroles.



ECO: The combination of the grill, fan and lower element is particularly suitable for cooking small quantities of food.



Half grill: For rapid cooking and browning of foods. Best results can be obtained by using the top shelf for small items, the lower shelves for larger ones, such as chops or sausages. For half grill heat is generated only at the centre of the element, so is ideal for smaller quantities.



Light



A: Product drying performance, measured from A+++ to D / G depending on the product family



Air cooling system: to ensure a safe surface temperatures.



Quadruple glazed: Number of glazed doors.



Fingerprint proof stainless steel: Fingerprint proof stainless steel keeps stainless steel looking as good as new.



Upper and lower element only: a traditional cooking method best suited for single items located in the centre of the oven. the top pf the oven will always be hottest. Ideal for roast, fruit cakes, bread etc.



Lower heating element only: This function is ideal for foods that require extra base temperature without browning, e.g. pastry dishes, pizza. Also suitable for slow cooking of stews and casseroles.



Circulaire: The combination of the fan and circular element around it gives a hot air cooking method. This provides many benefits including no preheat if cook time is more than 20 minutes, no flavour transfer when cooking different foods at the same time, less energy, and shorter cook times. Good for all types of food.



Grill element: Using of grill gives excellent results when cooking meat of medium and small portions, especially when combined with a rotisserie (where possible). Also ideal for cooking sausages and bacon.



Fan with grill element: The fan reduces the fierce heat from the grill, providing an excellent method of grilling various foods, chops, steaks, sausages etc. giving even browning and heat distribution, without drying out the food. The top two levels recommended for use, and the lower part of the oven can be used to keep items warm at the same time, an excellent facility when cooking a grilled breakfast. Half grill (centre portion only) is ideal for small quantities of food.



Pizza function: The simultaneous operation of three elements ensures an optimum cooking facility when used with the Smeg pizza stone.

Circulaire with upper and lower elements: The use of the fan with both elements allows food to be cooked quickly and effectively, ideal for large joints that require thorough cooking. It offers a similar result to rotisserie, moving the heat around the food, instead of moving the food itself, enabling any size or shape to be cooked.

Top element only: This is used from above only, and is ideal for foods that are finished off with golden topping but do not require the full heat from the grill. Dishes such as Lasagne, potato topped foods, and cheese topped recipes benefit from this mode.

All glass inner door: All glass inner door, a single flat surface which is simple to keep clean.

The inner door glass: can be removed with a few quick movements for cleaning.

Side lights: Two opposing side lights increase visibility inside the oven.

Automatic opening: some models have Automatic opening door when the cycle is finished which is a perfect solution for handle-less kitchen units as no handle is needed. For safety reasons, the door locks automatically when the machine is in use to avoid it being opened inadvertently.

Pyrolitic: Pyrolitic cleaning cycles can be selected as necessary to automatically clean the oven interior.

The oven cavity has 4 different cooking levels.

The oven cavity has 5 different cooking levels.

Soft close: all models are equipped with advanced function of smooth closing of the door, which allows the device to close smoothly and quietly.

Telescopic rails: allow you to pull out the dish and check it without having to remove it from the oven entirely.

Electronic control: Allows you to maintain temperature inside the oven with the precision 2-3 ° C. This enables to cook meals that are very sensitive to temperature changes, such as cakes, souffles, puddings.

Ultra rapid burners: Powerful ultra rapid burners offer up to 5kw of power.

Vapor Clean: a simple cleaning function using steam to loosen deposits in the oven cavity.

The capacity indicates the amount of usable space in the oven cavity in litres.

The capacity indicates the amount of usable space in the oven cavity in litres.

The touch timer display or DigiScreen guarantees simple functionality. They display the time, set programmed cooking and the minute minder timer.

Dedicated cooking function for the Air fryer rack AIRFRY . Ideal for recreating traditional frying in the oven, but with fewer calories and less fat.

Knobs control

Benefit

Gas hob

Gas provides constant control of the heat source, with an immediate change in temperature

Equipped with a thermocouple, the gas supply is cut off if the flame is extinguished for greater safety

Vapor Clean

Smeg's Vapor Clean function, is an assisted steam clean program designed to help loosen food residue and spills inside the oven for easy cleaning

Smeg's Vapor Clean function, is an assisted steam clean program designed to help loosen food residue and spills inside the oven for easy cleaning

Pyrolysis

Easy oven cleaning thanks to special pyrolytic function

Touch control

Easy and intuitive timer setting with a single touch

Storage compartment

More space thanks to the lower compartment, ideal for storing accessories or cooking utensils

Circulaire

The best cooking performances guaranteed by ventilated circular flow.

Multiple fans and heating elements guarantee the perfect aerodynamic heat flow, allowing homogeneous and quicker cooking inside the cavity.

Multilevel cooking

Several cooking levels allow maximum flexibility of use

Multilevel halogen light

Internal halogen lighting on different levels guarantees excellent visibility

Removalble inner glass

Internal door glasses are easily removable for complete cleaning

Tangential cooling

New cooling system with tangential fan and airflow from the door to the splashback

Telescopic guides

Easy extraction and safe insertion of trays into the oven thanks to telescopic guides

Adjustable height

Cooker top flushed with the working area thanks to adjustable feet

AirFry (AIRFRY optional accessory)

Lighter and tastier food thanks to airfry basket

Cold door

During any function, the external door glass is cold, avoiding any risk of burns

Pizza stone (optional accessory)

Baking with refractory stone for soft and crispy pizza and yeast products (STONE optional accessory)

BBQ (optional accessory)

Barbeque cooking directly in the oven with the double-sided grill

Isothermic Cavity

The best cooking performance at the highest energy efficiency

Soft close

The door is equipped with a specific system for silent closing

Single turbine

The oven has a fan equipped with a circular heating element allowing cooking with rotating heat