ALFA425H-2



Family	Ovens
Subfamily	Convection oven 4 trays EN 600x400 mm or GN1/1
Power supply	Electric
Oven type	Fan with humidification
Oven control	Mechanical
Trays capacity	4 trays EN 600x400 mm, GN1/1 (min. H 20 mm)
Power supply	400 V 3N~ / 10 A / 6,9 kW / 50 Hz
Other electrical connection	230 V~ / 30 A / 6,9 kW / 50 Hz
WiFi connection	Not available
Humidity generation	Direct in cavity
Adjustable feet	Yes
Product dimensions WxDxH	798x747x563 mm
Maximum depth with open door	1511 mm

Distribution

Industries	Bar / Cafeterias / Bistros / Wine bars / Pubs, Hotels, Restaurants, Bakeries / Pastry shops, Butcher shops / Delicatessens, Catering, Care facilities , Commercial food services, Grocery shops / Food retail

Aesthetics

Door with stainless steel stripes	Yes	**Front panel**	Yes
Colour	Stainless steel	**Serie**	Alfa

Controls

Timer setting range	1-60 minutes + endless

Options

Solutions	K4610X

Electrical Connection

Potential equalisation	Yes

Construction

Oven materials	Ever Clean enamel
Cavity dimensions (lxdxh)	672x437x340mm
Gross volume	670x560x420mm
Net volume	670x560x420mm
Internal net volume	670x560x420mm
Cavity material	Stainless steel
Shelves number	4
Tray frame support	Chrome
Shelves distance	77 mm
Door construction	Double glass
Door opening	Lateral
Handle type	New ergonomics
Openable glass	Openable
Fan type and number	2 contrarotating fans with time direction reversal
Engine speed	Ever Clean enamel
Engine speed	Single speed
Max standard speed motor rpm	2
Humidification levels	Manual
Exhaust position	Back
Components cooling system	Yes
Timer type	Electromecanical timer
Temperature range	50-270°C
End cooking signal	Yes
Orange light indicator t° achievement	Yes
Green light indicator t° achievement	Yes
Manual reset safety thermostat	Yes
Removable deflector	Yes
Lighting	2 Halogen lamps
Light power	40 W
Water load pipe	Yes
Water inlet pressure	50-500 kPa (min-max)
Power cable length	170 cm
Back panel	Galvanized
IPX protection	IPX3

Logistic Information

Packed product dimensions (WxDxH)	960x845x640 mm
EAN code	8017709270131
Net weight	56,200 kg
Gross weight (kg)	68,800 kg

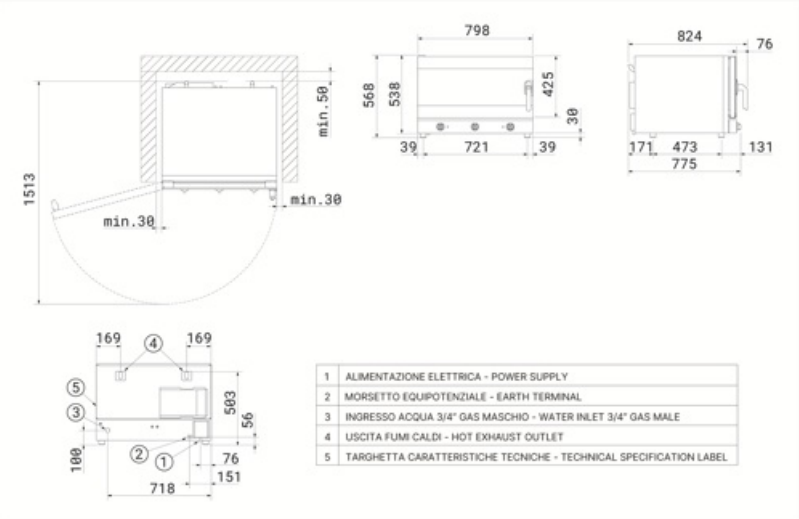

Compatible Accessories



3743

Flat aluminium tray



3751

Flat perforated aluminium tray



3805

Flat chrome-plated wire grid

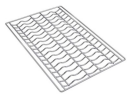

3810

Corrugated grid for baguettes



3927

Air flow reducer kit

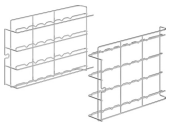

RGN11-420-2

Support rack for GN 1/1 flat trays, suitable for ALFA420/425/410 models



RUTVL

Wheels kit for all oven table models (4pcs)



SVRPP420-625

Connector kit for two stacked ALFA420+420 or ALFA420+625 models and hood



T11TH20

2cm height GN1/1 non-stick tray for Galileo professional



T11TH40

4cm height GN1/1 non-stick tray for Galileo professional



T11XH20

2cm height aluminium GN1/1 tray for Galileo professional



T11XH65

6,5cm height aluminium GN1/1 tray for Galileo professional

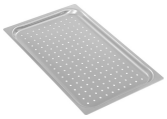

TF11XH2

Perforated aluminium GN1/1 tray for Galileo professional

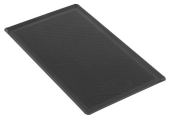

TMF11TH2

GN 1/1 non-sticking microperforated tray



TVL425

16-level tray holder rack for ALFA410/ALFA420/425 and ALFA625 ovens dim.800x800x900 mm (hieight with kit RUTVL: 998 mm)



TVL425D

4-level tray holder rack for ALFA410/ALFA420/ALFA425 (stacked) or ALFA1035 ovens, dim. 800x800x504 mm (hieight with kit RUTVL: 602 mm)

Symbols glossary

 Electric

 Fan forced heating

 Fan forced heating with humidity injection

Benefit (TT)

Mechanical control panel

Ease of use and effortless control of the essential cooking parameters

The control panel, equipped with practical knobs, allows for simple, intuitive, and effortless management of the main functions. Using the buttons, you can adjust the cooking time, temperature, and, in selected models, the level of humidification. By turning the knob to position 1, steam will be delivered until it is released.
In multifunction ovens with a mechanical control panel, there is also a dedicated button for selecting different oven functions based on the desired cooking mode.

Hinged opening

Easily accessible glass for effortless maintenance and cleaning

The glass panels are designed to be easily accessible and inspectable, ensuring great convenience during cleaning and maintenance operations. This feature significantly simplifies the process, making it quick and efficient, while ensuring that every intervention can be carried out with maximum comfort and complete safety.

Humidity management

Impeccable cooking thanks to precise humidity control

Thanks to the effective management of small amounts of steam, perfect browning can be achieved while maintaining the product's softness and promoting the development of its internal structure. Different humidity levels can be set, which determine the frequency of activation cycles. Each cycle consists of two seconds of water vapour spraying inside the cooking chamber, followed by a 15-second pause.