ALFA43XMFHDS

Familia	Hornos
Subfamilia	Multifunction oven 4 trays 435x320 mm
Power supply	Electric
Oven type	Convection multifunction oven with humidifier
Control del horno	Mecánico
Capacidad de bandejas	4 bandejas 435x320 mm
Fuente de alimentación	230 V~ / 13 A / 3,0 kW / 50 Hz
Almacenamiento de programas con aplicación	No disponible
Humidity generation	Direct in cavity
Pies ajustables	Sí
Product dimensions WxDxH	602x580x537 mm
Profundidad máxima con puerta abierta	993 mm

Distribución

Usuarios potenciales	Cafeterías - Vinotecas; Hoteles; Restaurantes - Pubs; Panaderías - Pastelerías; Industria de panadería congelada; Comercio minorista de alimentos

Estética

Serie	Alfa	**Panel frontal en relieve**	Sí
Color	Acero inoxidable	**Logo**	Estampado Smeg
Puerta con bandas de acero inoxidable	Sí		

Mandos

Minutos programables	0-60 + sin fin

Equipo accesorios incluidos

Bandeja de aluminio	kit de 4 piezas

Conexión eléctrica

Enchufe	Schuko (F;E)

Construcción

Material del horno	Acero inoxidable/vidrio/plástico	**Niveles de humidificación**	Manual
Dimensiones de la camara (LxWxH)	460x360x425mm	**Posición chimenea**	Trasera
Material de la cavidad	Acero Inoxidable	**Tipo temporizador**	Temporizador electromecánico
Número de estantes	4	**Rango de temperatura**	50-250°C
Soporte de bandeja	Cromado	**Alarma fin de cocción**	Sí
Distancia entre los estantes	80 mm	**Indicador de luz naranja t° logro**	Sí
Puerta fría con doble cristal completamente abatible	Sí	**Indicador de luz verde t° logro**	Sí
Puerta abierta	Inclinación	**Rearme manual del termostato de seguridad**	Sí
Tipo de mango	Smeg		
Cristal interior	Desmontable	**Deflector extraíble**	Sí
Número y tipo de ventiladores	1	**Número de luz**	1 Halogen lamp
		Potencia de luz	40 W
Potencia motor del ventilador	80 W	**Water inlet pressure**	50-500 kPa (min-max)
RPM del motor	Velocidad única	**Longitud del cable de alimentación**	115 cm
Material de la cavidad	2700 rpm	**Panel trasero**	Galvanizado
Rpm de baja velocidad	2100 rpm	**Opción de tiempo**	IPX3

Datos logísticos

Peso neto	36.400 kg	**Height (mm) packed**	610 mm
Packed width	625 mm	**Peso bruto (kg)**	38.500
Packaged depth	695 mm	**Dimensiones del producto embalado**	

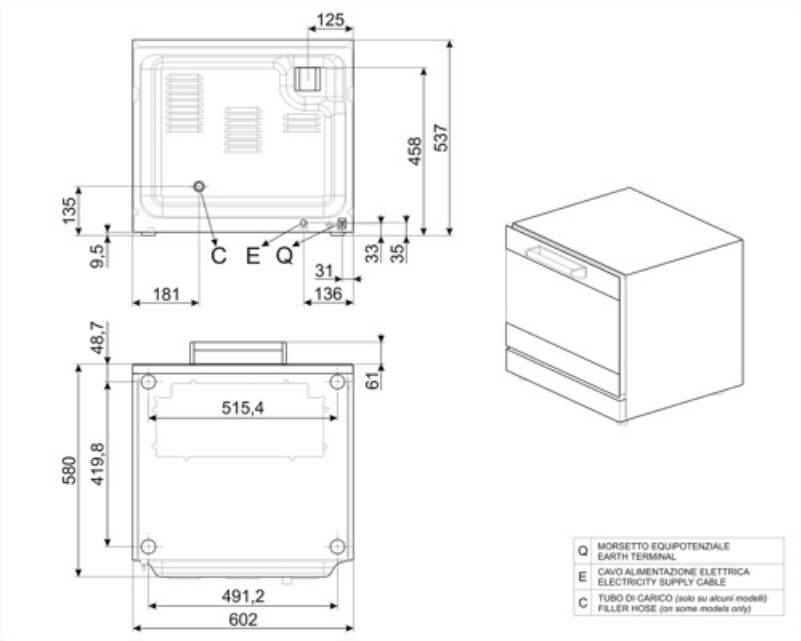

Accesorios Compatible

3820

Bandeja plana de aluminio (4uds)

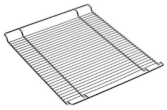

3900

Kit of 4 chrome wire grids 435×320 mm

RUTVL

Set of 4 wheels, fits all professional oven tables

TVL40

8-level tray holder rack for ALFA43 and ALFA45 ovens, dim. 600x600x900 mm (hieight with kit RUTVL: 998 mm)

Symbols glossary

- Electric
- Double speed fan
- Fan with lower element
- Calentamiento forzado por ventilador
- Fan forced heating with humidity injection
- Large grill heating element
- Static heating with upper and lower elements

Benefit (TT)

Mechanical control panel

Ease of use and effortless control of the essential cooking parameters

The control panel, equipped with practical knobs, allows for simple, intuitive, and effortless management of the main functions. Using the buttons, you can adjust the cooking time, temperature, and, in selected models, the level of humidification. By turning the knob to position 1, steam will be delivered until it is released.
In multifunction ovens with a mechanical control panel, there is also a dedicated button for selecting different oven functions based on the desired cooking mode.

Clip-open

Easily accessible glass for effortless maintenance and cleaning

The glass panels are designed to be easily accessible and inspectable, ensuring great convenience during cleaning and maintenance operations. This feature significantly simplifies the process, making it quick and efficient, while ensuring that every intervention can be carried out with maximum comfort and complete safety.

Two-speed fan

Perfect ventilation for the ideal cooking of the most delicate dishes

The fan speed adjustment function allows you to tailor the ventilation intensity to the specific needs of each dish, ensuring consistently flawless results. Thanks to the dual-speed setting, you can create the perfect conditions for delicate preparations such as meringues, profiteroles, and soufflés, enveloping them in a gentler, more even airflow that preserves their lightness and structure.

Humidity management

Impeccable cooking thanks to precise humidity control

Thanks to the effective management of small amounts of humidity, perfect browning can be achieved while maintaining the product’s softness and promoting the development of its internal structure. Different humidity levels can be set, which determine the frequency of activation cycles. Each cycle consists of two seconds of water vapour spraying inside the cooking chamber, followed by a 15-second pause.