BB3679

Typ	Grill
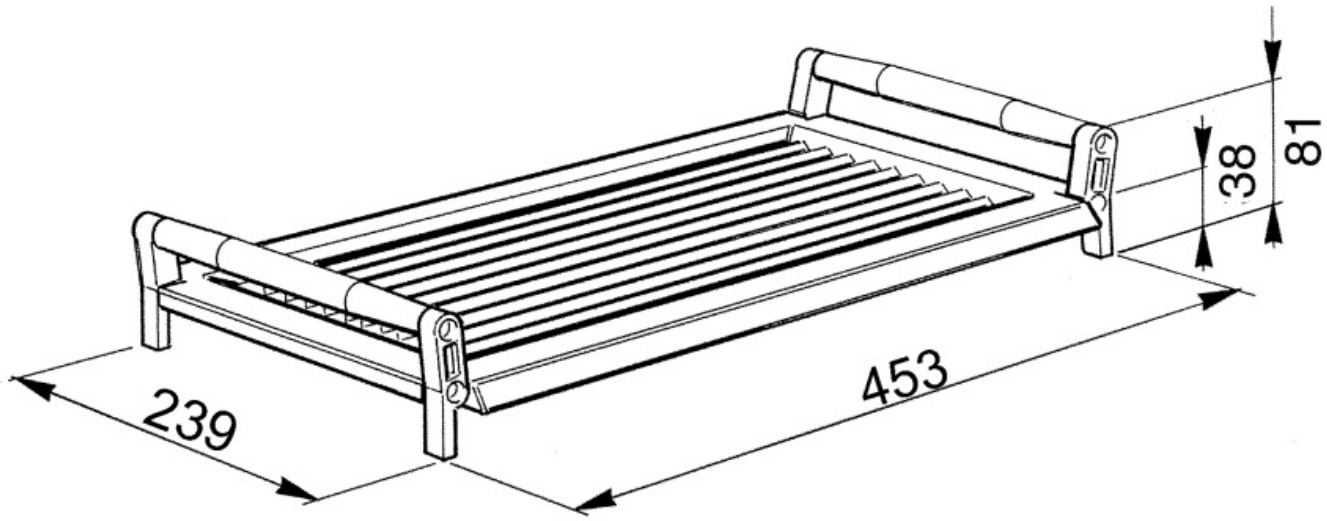
Cast Iron griddle