BG93GMBL

Cooker size	90x60 cm
N. of cavities with energy label	2
Cavity heat source	ELECTRICITY
Hob type	Gas
Type of main oven	Thermo-ventilated
Type of second oven	Thermo-ventilated
Cleaning system main oven	Ever Clean enamel
EAN code	8017709345907
Energy efficiency class	A
Energy efficiency class, second cavity	B



Aesthetics

Design	Standard	**Type of control knobs**	Smeg Master Black
Command panel finish	Enamelled metal	**Controls colour**	Black
Aesthetic	Classica	**No. of controls**	8
Logo	Assembled	**Serigraphy colour**	Silver
Colour	Black	**Display name**	DigiScreen
Logo position	Command panel	**Door**	Full glass
Finishing	Glossy black	**Glass type**	Black
Series	Master	**Handle**	Smeg Classic
Hob colour	Black enamel	**Handle Colour**	Brushed stainless steel
Type of pan stands	Cast Iron	**Feet color**	Black
Type of control setting hob	Control knobs		

Programs / Functions main oven

No. of cooking functions	1

Traditional cooking functions

Circulaire

Programs / Functions auxiliary oven

Cooking functions cavity 2	1

Programs / Functions third oven

No. of functions third oven	1
Full grill	

Hob technical features



Total no. of cook zones	5

Front left - Gas - Rapid - 2.90 kW
Rear left - Gas - Semi Rapid - 1.80 kW
Central - Gas - UR - 4.00 kW
Rear right - Gas - Semi Rapid - 1.80 kW
Front right - Gas - AUX - 1.00 kW

Type of gas burners	Standard	**Gas safety valves**	Yes
Automatic electronic ignition	Yes	**Burner caps**	Matt black enamelled

Main Oven Technical Features



No. of lights	1	**Removable door**	Yes
Fan number	1	**Full glass inner door**	Yes
Net volume of the cavity	61 l	**Removable inner door**	Yes
Gross volume, 1st cavity	70 l	**Total no. of door glasses**	3
Cavity material	Ever Clean enamel	**No.of thermo-reflective door glasses**	1
No. of shelves	4	**Safety Thermostat**	Yes
Type of shelves	Metal racks	**Cooling system**	Tangential
Light type	Halogen	**Usable cavity space dimensions (HxWxD)**	316x460x412 mm
Light Power	40 W	**Temperature control**	Electro-mechanical
Cooking time setting	Start and Stop	**Circular heating element - Power**	2000 W
Door opening	Side opening		

Options Main Oven

Timer	Yes	**Minimum Temperature**	50 °C
End of cooking acoustic alarm	Yes	**Maximum temperature**	245 °C

Second Oven Technical Features



Fan number	1	**Full glass inner door**	Yes
Net volume of the second cavity	62 l	**No. total door glasses**	2
Gross volume, 2nd cavity	69 l	**No. thermo-reflective door glasses**	1
Cavity material	Ever Clean enamel	**Safety Thermostat**	Yes
No. of shelves	9	**Cooling system**	Tangential
Type of shelves	Metal racks	**Usable cavity space dimensions (HxWxD)**	605x275x370 mm
Door opening	Side opening	**Temperature control**	Electro-mechanical
Removable door	Yes	**Circular heating element - Power**	2500 W

Options Auxiliary Oven

Minimum Temperature	50 °C	**Maximum temperature**	245 °C

Third Oven Technical Features



Net volume, 3rd cavity	35 l	**No. total door glasses**	3
Gross volume, 3rd cavity	41 l	**No. of thermo-reflective door glasses**	1
Cavity material	Ever Clean enamel	**Safety Thermostat**	Yes
No. of shelves	2	**Cooling system**	Tangential
Type of shelves	Metal racks	**Usable cavity space dimensions (HxWxD)**	169x440x443 mm
Door opening	Flap down	**Temperature control**	Electro-mechanical
Removable door	Yes	**Large grill - Power**	2700 W
Full glass inner door	Yes	**Grill type**	Electric
Removable inner door	Yes	**Tilting grill**	Yes

Options Third Oven

Minimum Temperature	50 °C	**Maximum temperature**	260 °C

Accessories included for Main Oven & Hob

Rack with back and side stop	1	**40mm deep tray**	1

Accessories included for Secondary Oven

Oven grid with back stop	3

Electrical Connection

Electrical connection rating	7600 W	**Additional connection modalities**	Double and Three Phase
Current	33 A	**Frequency**	50/60 Hz
Voltage	220-240 V	**Terminal block**	5 poles
Voltage 2 (V)	380-415 V	**Plug**	Not present
Electric cable	Installed, Single phase		

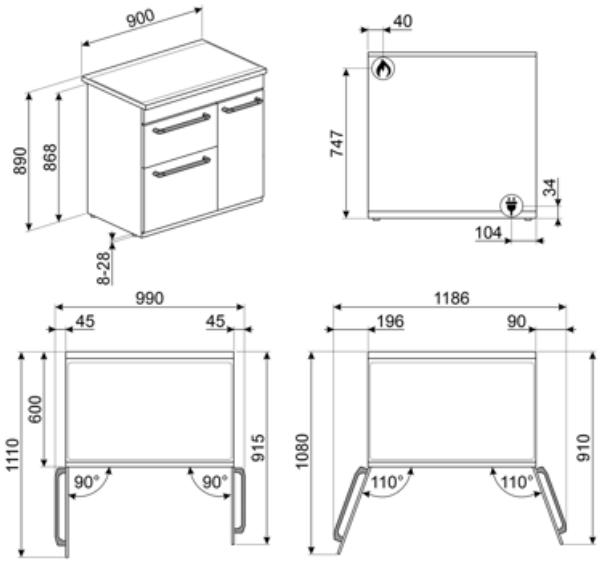

Compatible Accessories



AIRFRY2

Air fryer tray. Ideal for recreating traditional frying in the oven, but with fewer calories and less fat. It allows you to cook quickly and simply dishes such as French fries, fried vegetables and fish, ensuring perfect browning and crispiness.



BN620-1

Enamelled tray suitable for 45 cm and 60 cm ovens. Depth 20 mm. Perfect for a wide range of savoury and sweet baking.



BNP608T

Teflon-coated tray, 8 mm depth, to be placed on the grid



GTP

Partially extractable telescopic guides (1 level), suitable for traditional ovens. Made in stainless steel, they guarantee stability and facilitate the smooth extraction of the trays.



KIT90N9

Splashback black , 90 cm, suitable for BU & BM cookers



PALPZ

Pizza shovel with folding handle. Dimensions L31.5 x H32.5 cm. Easy and convenient to use and store. Perfect for serving pizza, bread and savory pastries in a safe and professional way.

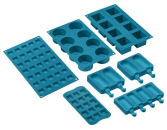

SMOLD

Set of 7 silicone moulds for ice creams, ice lollies, pralines, ice cubes or to portion food. Usable from -60°C to +230°C



BBQ

Double sided plate BBQ. Suitable for recreating succulent and crispy dishes in the oven with the typical taste of grilled cooking. The ribbed side is particularly suitable for meats and cheeses. The smooth side for fish, seafood and vegetables.



BN640

Enamelled tray suitable for 45cm and 60cm ovens. Depth 540 mm. Perfect for cooking and roasting meat and fish in sauces. Also ideal for experimenting with lighter and crunchy side dishes



GRM

Coffee machine support



GTT

Totally extractable telescopic guides (1 level), suitable for traditional ovens. Made in stainless steel, they guarantee stability and facilitate the smooth extraction of the trays.



KITH93

Height extension kit (950mm), black, suitable for TR93 cookers (945-960mm)



SFLK1

Child lock



WOKGHU

Cast iron WOK Support

Symbols glossary



Heavy duty cast iron pan stands: for maximum stability and strength.



Installation in column: Installation in column.



Air cooling system: to ensure a safe surface temperatures.



Double glazed doors: Number of glazed doors.



B: Product energy rating, measured from A+++ to D / G depending on the product family.



Circulaire: it is the perfect function for cooking all types of dishes in a more delicate way. The heat comes from the back of the oven and is distributed quickly and evenly. The fan is active. It is also ideal for cooking on multiple levels without mixing smells and flavors.



All glass inner door: All glass inner door, a single flat surface which is simple to keep clean.



Side lights: Two opposing side lights increase visibility inside the oven.



The oven cavity has 4 different cooking levels.



Electronic control: Allows you to maintain temperature inside the oven with the precision 2-3 ° C. This enables to cook meals that are very sensitive to temperature changes, such as cakes, souffles, puddings.



Ultra rapid burners: Powerful ultra rapid burners offer up to 5kw of power.



The capacity indicates the amount of usable space in the oven cavity in litres.



Energy efficiency class A



Knobs control



4.3 inch display with LED technology, usability with knobs + 3 touch keys



Triple glazed doors: Number of glazed doors.



Ever Clean Enamel: Ever Clean enamel is applied electrostatically, corner to corner and edge to edge to prevent cracking or cracks over time. It is a particular pyrolytic enamel, resistant to acids which, in addition to being pleasantly bright, promotes greater cleaning of the oven walls, thanks to its lower porosity. It is baked at over 850 °C and slowly polymerized at a scientifically determined rate to ensure uniform depth and strength. Ever Clean enamel creates an impeccable finish both on the inside of the oven and on the trays, making the surfaces of the oven incredibly easy to maintain over time as it reduces the adhesion of fat during cooking.



Grill element: Using of grill gives excellent results when cooking meat of medium and small portions, especially when combined with a rotisserie (where possible). Also ideal for cooking sausages and bacon.



The inner door glass: can be removed with a few quick movements for cleaning.



The oven cavity has 2 different cooking levels.



The oven cavity has 9 different cooking levels.



Tilting grill: the tilting grill can be easily unhooked to move the heating element and clean the roof of the appliance in one simple step.



The capacity indicates the amount of usable space in the oven cavity in litres.



The capacity indicates the amount of usable space in the oven cavity in litres.

Benefit (TT)

Gas hob

Gas provides permanent control of the heat source and the temperature change is immediate

Equipped with a thermocouple, the gas supply is cut off if the flame is extinguished for greater safety.

Ever Clean Enamel

Easy oven cleaning thanks to special pyrolytic enamel

Touch control

Easy and intuitive timer setting with a single touch

True-convection

The best cooking performances guaranteed by ventilated circular flow

Multiple fans and heating elements guarantee the perfect aerodynamic heat flow, allowing homogeneous and quicker cooking inside the cavity.

Multilevel cooking

Several cooking levels allow maximum flexibility of use

Multilevel halogen light

Internal halogen lighting on different levels guarantees excellent visibility

Removalble inner glass

Internal door glasses are easily removable for complete cleaning

Tangential cooling

New cooling system with tangential fan and airflow from the door to the splashback

Adjustable height

Cooker top flushed with the working area thanks to adjustable feet

Isothermic Cavity

The best cooking performance at the highest energy efficiency

Cold door

During any function, the external door glass is cold, avoiding any risk of burns

AirFry (AIRFRY optional accessory)

Lighter and tastier food thanks to airfry basket (optional accessory)

BBQ (optional accessory)

Barbecue cooking directly in the oven with the double-sided grill (BBQ optional accessory)

Pizza stone (optional accessory)

Baking with refractory stone for soft and crispy pizza and yeast products (STONE optional accessory)

Single turbine

The oven has a fan equipped with a circular heating element allowing cooking with rotating heat