BN640

Suitable for	Ovens, Cookers
Type	Tray
Gift box	Yes
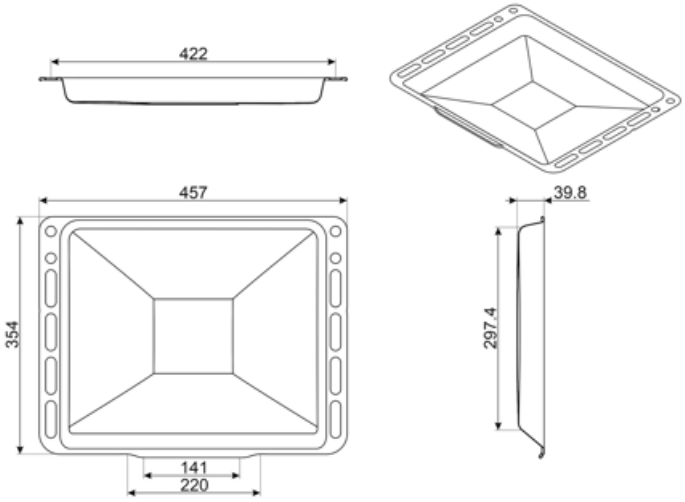
Enamelled tray suitable for 45cm and 60cm ovens.
Depth 540 mm.
Perfect for cooking and roasting meat and fish in sauces.
Also ideal for experimenting with lighter and crunchy side dishes