C6IPWHM2

Cooker size	60x60 cm
N. of cavities with energy label	1
Cavity heat source	ELECTRICITY
Hob type	Induction
Type of main oven	Thermo-ventilated
Cleaning system main oven	Pyrolitic
EAN code	8017709332594
Energy efficiency class	A



Aesthetics

DIGI screen

Design	Square design	**Type of control knobs**	Smeg Classic
Command panel finish	Enamelled metal	**Controls colour**	Stainless steel
Aesthetic	Classica	**No. of controls**	6
Logo	Assembled st/steel	**Serigraphy colour**	Black
Colour	White	**Display name**	DigiScreen
Logo position	Facia below the oven	**Door**	With 2 horizontal strips
Finishing	Glossy	**Glass type**	Eclipse
Upstand	Yes	**Handle**	Smeg Classic
Series	Sinfonia	**Handle Colour**	Brushed stainless steel
Hob colour	Stainless steel	**Storage compartment**	Door
Type of control setting hob	Hybrid: Knobs + Touch	**Feet color**	Silver
Hob LED colours	Red		

Programs / Functions main oven

No. of cooking functions 9

Traditional cooking functions

- Static
- Fan assisted
- Circulaire
- Turbo
- Eco
- Small grill
- Large grill
- Fan grill (large)
- Fan assisted base

Cleaning functions

Pyrolytic

Hob options

Control lock	Yes	**Minute minder**	1
End cooking timer	4	**Bridge option**	Yes

Hob technical features

Total no. of cook zones 4

Front left - Induction - single - 1.50 kW - Booster 2.00 kW - - Ø 18.0 cm

Rear left - Induction - single - 1.50 kW - Booster 2.00 kW - - Ø 18.0 cm

Rear right - Induction - single - 1.50 kW - Booster 2.00 kW - - Ø 18.0 cm

Front right - Induction - single - 1.50 kW - Booster 2.00 kW - - Ø 18.0 cm

Number of Flexible zones	2	**Automatic pan detection**	Yes
Booster power left Bridge	3.0 kW	**Minimum pan diameter indication**	Yes
Booster power right Bridge	3.0 kW	**Selected zone indicator**	Yes
Automatic switch off when overheat	Yes	**Residual heat indicator**	Yes

Main Oven Technical Features

No. of lights	1	**Removable inner door**	Yes
Fan number	1	**Total no. of door glasses**	4
Net volume of the cavity	70 l	**No.of thermo-reflective door glasses**	3
Gross volume, 1st cavity	79 l	**Safety Thermostat**	Yes
Cavity material	Ever Clean enamel	**Heating suspended when door is opened**	Yes
No. of shelves	5	**Cooling system**	Tangential
Type of shelves	Metal racks	**Door Lock During Pyrolisis**	Yes
Light type	Halogen	**Usable cavity space dimensions (HxWxD)**	360X460X425 mm
Light Power	40 W	**Temperature control**	Electro-mechanical
Cooking time setting	Start and Stop	**Lower heating element power**	1200 W
Light when oven door is open	Yes	**Upper heating element - Power**	1000 W
Door opening	Flap down	**Large grill - Power**	2700 W
Removable door	Yes		
Full glass inner door	Yes		

Circular heating element - Power	2000 W
Grill type	Electric

Options Main Oven

Timer	Yes	**Minimum Temperature**	50 °C
End of cooking acoustic alarm	Yes	**Maximum temperature**	260 °C

Accessories included for Main Oven & Hob



Rack with back and side stop	2	**Telescopic Guide rails, partial Extraction**	1
40mm deep tray	1	**Meat Probe**	1
Grill mesh	1		

Electrical Connection

Electrical connection rating	10000 W	**Additional connection modalities**	Double and Three Phase
Current	44 A	**Frequency**	50/60 Hz
Voltage	220-240 V	**Terminal block**	5 poles
Voltage 2 (V)	380-415 V	**Plug**	Not present
Electric cable	Not included		

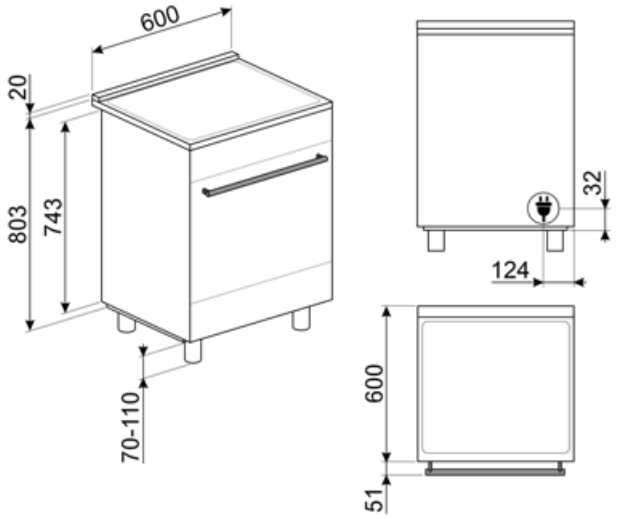
600
20
803
743
70-110
32
124
600
51

Compatible Accessories



BN620-1

Enamelled tray suitable for 45 cm and 60 cm ovens. Depth 20 mm. Perfect for a wide range of savoury and sweet baking.



BNP608T

Teflon-coated tray, 8 mm depth, to be placed on the grid



GTT

Totally extractable telescopic guides (1 level), suitable for traditional ovens. Made in stainless steel, they guarantee stability and facilitate the smooth extraction of the trays.



SCRP

Non-scratch hob scraper - suitable for induction and ceramic hobs

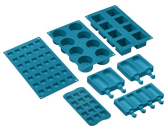

SMOLD

Set of 7 silicone moulds for ice creams, ice lollies, pralines, ice cubes or to portion food. Usable from -60°C to +230°C



BN640

Enamelled tray suitable for 45cm and 60cm ovens. Depth 540 mm. Perfect for cooking and roasting meat and fish in sauces. Also ideal for experimenting with lighter and crunchy side dishes



GTP

Partially extractable telescopic guides (1 level), suitable for traditional ovens. Made in stainless steel, they guarantee stability and facilitate the smooth extraction of the trays.



KITP60X9

Splashback, stainless steel, suitable for 60X60cm Concerto cookers with pyro and MF oven



SFLK1

Child lock

Alternative products



C6IPMBM2

Colour: Matt Black



C6IPXM2

Colour: Stainless Steel

Symbols glossary



Child lock: some models are fitted with a device to lock the programme/cycle so it cannot be accidentally changed.



Energy efficiency class A



Installation in column: Installation in column.



Air cooling system: to ensure a safe surface temperatures.



Quadruple glazed: Number of glazed doors.



Ever Clean Enamel: Ever Clean enamel is applied electrostatically, corner to corner and edge to edge to prevent cracking or cracks over time. It is a particular pyrolytic enamel, resistant to acids which, in addition to being pleasantly bright, promotes greater cleaning of the oven walls, thanks to its lower porosity. It is baked at over 850 °C and slowly polymerized at a scientifically determined rate to ensure uniform depth and strength. Ever Clean enamel creates an impeccable finish both on the inside of the oven and on the trays, making the surfaces of the oven incredibly easy to maintain over time as it reduces the adhesion of fat during cooking.



Fan assisted base: the mix of fan and lower heating element alone allows to finish cooking foods already cooked on the surface but not internally more quickly. This system is recommended to finish cooking foods that are already well cooked on the surface, but not internally, which therefore require a moderate higher heat. Ideal for any type of food.



Fan assisted: Intense and homogeneous traditional cooking, also suitable for complex recipes. The fan is active and the heat comes from below and from above at the same time. Ventilated cooking ensures a faster and more homogeneous result, leaving fragrant foods outside and moister inside. Ideal for baked pasta, biscuits, roasts and cobblers.



Static: Traditional cooking suitable for the preparation of one dish at a time. The fan is not active and the heat comes from below and from above at the same time. Static cooking is slower and more delicate, ideal in order to get well cooked and dry dishes even inside. Ideal for cooking all types of roasts, fatty meats, bread, filled cakes.



Circulaire: it is the perfect function for cooking all types of dishes in a more delicate way. The heat comes from the back of the oven and is distributed quickly and evenly. The fan is active. It is also ideal for cooking on multiple levels without mixing smells and flavors.



ECO: low energy consumption cooking: this function is particularly suitable for cooking on a single shelf with low energy consumption. It is recommended for all types of food except those that can generate a lot of moisture (for example vegetables). To achieve maximum energy savings and reduce time, it is recommended to put the food in the oven without preheating the cooking compartment.



Grill: Very intense heat coming only from above from a double heating element. The fan is not active. Provides excellent grilling and gratinating results. Used at the end of cooking, it gives a uniform browning to dishes.



Half grill: For rapid cooking and browning of foods. Best results can be obtained by using the top shelf for small items, the lower shelves for larger ones, such as chops or sausages. For half grill heat is generated only at the centre of the element, so is ideal for smaller quantities.



Fan grill: very intense heat coming only from above from a double heating element. The fan is active. It allows the optimal grilling of thickest meats. Ideal for large cuts of meat.

Turbo: the heat comes from 3 directions: above, below and from the back of the oven. The fan is active. It allows quick cooking, even on several shelves without mixing the aromas. Ideal for large volumes or foods that require intense cooking.

Induction: The work of these hobs is based on the principle of electromagnetic induction. The heat is generated directly in the bottom of the pan during its contact with the hob.

The inner door glass: can be removed with a few quick movements for cleaning.

Automatic opening: some models have Automatic opening door when the cycle is finished which is a perfect solution for handle-less kitchen units as no handle is needed. For safety reasons, the door locks automatically when the machine is in use to avoid it being opened inadvertently.

Indication of residual heat: After the glass ceramic hob is switched off the residual heat indicator shows which of the heating zones still remains hot. When the temperature drops below 60 ° C, the indicator goes out.

Telescopic rails: allow you to pull out the dish and check it without having to remove it from the oven entirely.

TWIN_ZONE_72dpi

4.3 inch display with LED technology, usability with knobs + 3 touch keys

Overheat protection: The safety system that automatically turns off the hob in case of overheating of the control unit.

All glass inner door: All glass inner door, a single flat surface which is simple to keep clean.

Side lights: Two opposing side lights increase visibility inside the oven.

PYROLYSIS - AUTOMATIC CLEANING FUNCTION: the oven heats up to a temperature approaching 500 ° C and chars grease and food residues into a fine ash that can be easily wiped off with a damp cloth. At such a high temperature, the door locks automatically for safety, while the temperature of the door remains controlled so it is safe to touch User adjustable function based on the level of dirt present in the oven.

The oven cavity has 5 different cooking levels.

Timer: All ceramic hobs have a timer which automatically ends cooking after a preset time.

The capacity indicates the amount of usable space in the oven cavity in litres.