C9174DN2D



Product Family	Refrigerator
Installation	Built-in
Category	Bottom Mount
Built-in niche	178
Reference width	Until 60 cm
Reference height	160 - 200 cm
Sistema Total No - Frost	Total
Cooling type	Total No Frost - Double Cooling system
Defrost	Automatic
Hinge type	Door on door
Hinge position	Right
Reversible door	Yes
EAN code	8017709337230

Aesthetics

Aesthetic	Universale	**Door shelves profile color**	Silver
Colour	White	**Drawers profile color**	Silver
Material	Metal sheet	**Color of glass shelf profile**	Chrome
Side material	Steel	**Display**	LCD
Side colour	White	**Display position**	Interno (sul Top)
Logo	Silk screen		

Refrigerator compartment features

No. of adjustable shelves	3	**Type of crisper/vegetable drawers cover**	Glass
Number of fruit and vegetables drawers	1	**No. of lights refrigerator compartment**	3
Shelves material	Glass	**Life Plus zone-0°C**	Yes
Type of crisper/vegetable drawers cover	Standard	**Internal light in fridge**	Yes
Crisper Cover	Yes	**Type of internal light (fridge)**	LED

Refrigerator Inner Door

No. of door shelves with transparent cover	1	**No. of bottle shelves**	1

Number of adjustable door shelves	2

Other Refrigerator features



Accessories	Egg tray	**Fan**	Yes
MultiFlow	Metal		

Freezer compartment features

Number of drawers	3

Other Freezer features

Accessories	1 ice box

Other technical features



Functions display	Fast freezing, Fast cooling, ECO, Temperature alarm
Temperature alarm lamp	Yes
Door open alarm	Yes
Temperature Alarm	Yes
Type of temperature control	Electronic
No. of compressors	1
Refrigerant gas type	R600a
Type of compressor	Inverter
Refrigerant Quantity (g)	58 g
Max weight door panel (fridge)	21 kg
Foam agent	Cyclopentane
Max weight door panel (freezer)	21 kg

Performance / Energy Label - Reg. 2019



Annual energy consumption	173 kWh/a	**Airborne acoustical noise emissions**	35 dB(A) re 1 pW
Energy efficiency class	D	**Temperature Rise Time**	11,00 h
Airborne acoustical noise emission class	B	**4 star - Freezing capacity**	7,3 kg/24h
Total net volume	244 l	**Climate class**	SN, N, ST, T
Sum of the volumes of the frozen compartment(s)	62 l	**EEI**	80 %

Sum of the volumes of the chill compartment(s) and the unfrozen compartment(s)	182 l

Electrical Connection

Electrical connection rating	140 W	**Frequency (Hz)**	50 Hz
Current	1,1 A	**Power supply cable length**	240 cm
Voltage (V)	230-240 V	**Plug**	(F;E) Schuko

Logistic Information

Width	557 mm	**Height**	1769 mm
Width of the built-in niche	560 mm	**Height of the built-in niche**	1780 mm
Depth without handle	549 mm	**Product width with maximum doors opening**	780 mm
Depth of the built-in niche	551 mm	**Product depth with doors open at 90°**	1085 mm

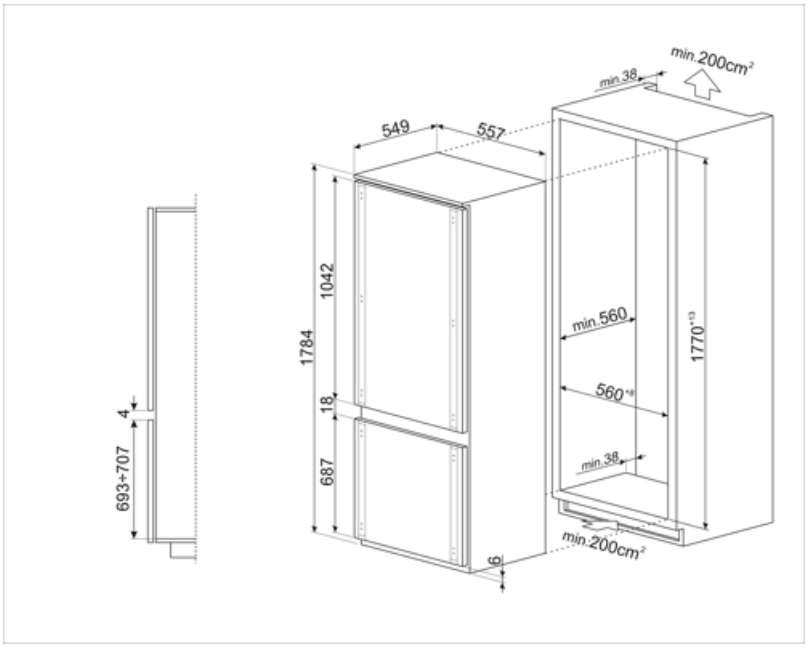

Symbols glossary



The automatic defrost system works by automatically defrosting at regular intervals eliminating the need to defrost altogether.



LCD display: to optimize performance and simplify the use of the appliance.



Ventilated: Forced distribution of cold air in the refrigerator compartment, which allows even temperature distribution within the fridge.



LED interior lighting: is a more energy efficient and long lasting way of illuminating the interior of the appliance.



Multiflow Cooling System: the Multiflow ventilation system allows an even distribution of cool air around the fridge cabinet. The stainless steel panel gives a more premium look to the appliance.



Built-in niche



Energy efficiency class D



Economical mode: Analyzes fridge functioning during the activation and optimizes the operating cycle in order to reduce power consumption.



Fast freezing: The fast freezing function brings the temperature of the compartment down when activated a few hours prior to usage.



Life Plus 0°C: The temperature in the Lifeplus compartments is kept at 0°C, which preserves fresh meat and fish longer.



Smeg's evolution towards more intelligent and eco-friendly models has led to the choice of Inverter technology, which significantly reduces consumption.