C92IPN2

Cooker size	90x60 cm
N. of cavities with energy label	2
Cavity heat source	ELECTRICITY
Hob type	Induction
Type of main oven	Thermo-ventilated
Type of second oven	Static
Cleaning system main oven	Pyrolitic
EAN code	8017709336240
Energy efficiency class	A
Energy efficiency class, second cavity	A



Aesthetics

Design	Square design	**Type of control knobs**	Smeg Classic
Command panel finish	Enamelled metal	**Controls colour**	Matt Black
Aesthetic	Classica	**No. of controls**	8
Logo	Assembled st/steel	**Serigraphy colour**	Silver
Colour	Matt Black	**Display name**	DigiScreen
Logo position	Facia below the oven	**Door**	With 2 horizontal strips
Finishing	Matt black	**Glass type**	Eclipse
Upstand	Yes	**Handle**	Smeg Classic
Series	Sinfonia	**Handle Colour**	Matt Black
Hob colour	Matt black painted	**Storage compartment**	Door
Type of control setting hob	Control knobs	**Feet color**	Black
Hob LED colours	Red		

Programs / Functions main oven

No. of cooking functions	9

Traditional cooking functions

- Static
- Fan assisted
- Circulaire
- Turbo
- Eco
- Large grill
- Fan grill (large)
- Base
- Fan assisted base

Cleaning functions

Pyrolytic

Programs / Functions auxiliary oven

Cooking functions cavity 2	3
Bottom element + Upper element	

Traditional cooking functions, cavity 2

Static | Large grill | Bottom

Hob technical features

Total no. of cook zones 5

Front left - Induction - multizone - 2.10 kW - Booster 2.30 kW - 21.0x19.0 cm
Rear left - Induction - multizone - 1.60 kW - Booster 1.85 kW - 21.0x19.0 cm
Central - Induction - single - 2.30 kW - Booster 3.00 kW - Ø 27.0 cm
Rear right - Induction - single - 1.20 kW - Booster 1.40 kW - Ø 18.0 cm
Front right - Induction - single - 2.30 kW - Booster 3.00 kW - Ø 21.0 cm

No. of cooking zones with Booster	5	**Automatic pan detection**	Yes
Number of Flexible zones	1	**Minimum pan diameter indication**	Yes
Automatic switch off when overheat	Yes	**Selected zone indicator**	Yes
Automatic switch off when overflow	Yes	**Residual heat indicator**	Yes

Main Oven Technical Features

No. of lights	1	**Removable inner door**	Yes
Fan number	1	**Total no. of door glasses**	4
Net volume of the cavity	70 l	**No.of thermo-reflective door glasses**	3
Gross volume, 1st cavity	79 l	**Safety Thermostat**	Yes
Cavity material	Ever Clean enamel	**Heating suspended when door is opened**	Yes
No. of shelves	5	**Cooling system**	Tangential
Type of shelves	Metal racks	**Door Lock During Pyrolisis**	Yes
Roof Liner	Yes	**Usable cavity space dimensions (HxWxD)**	360X460X425 mm
Light type	Halogen	**Temperature control**	Electro-mechanical
Light Power	40 W	**Lower heating element power**	1200 W
Cooking time setting	Start and Stop		
Light when oven door is open	Yes		
Door opening	Flap down		

Removable door	Yes	**Upper heating element - Power**	1000 W
Full glass inner door	Yes	**Grill element**	1700 W
		Large grill - Power	2700 W
		Circular heating element - Power	2000 W
		Grill type	Electric

Options Main Oven

Timer	Yes	**Minimum Temperature**	50 °C
End of cooking acoustic alarm	Yes	**Maximum temperature**	260 °C

Second Oven Technical Features



Net volume of the second cavity	35 l	**No. total door glasses**	3
Gross volume, 2nd cavity	36 l	**No. thermo-reflective door glasses**	1
Cavity material	Ever Clean enamel	**Safety Thermostat**	Yes
No. of shelves	4	**Cooling system**	Tangential
Type of shelves	Metal racks	**Usable cavity space dimensions (HxWxD)**	311x206x418 mm
No. of lights	1	**Temperature control**	Electro-mechanical
Light type	Incandescent	**Lower heating element - power**	700 W
Light Power	25 W	**Upper heating element - Power**	600 W
Door opening	Flap down	**Grill element - power**	1300 W
Removable door	Yes	**Large grill - Power**	1900 W
Full glass inner door	Yes	**Grill type**	Electric
Removable inner door	Yes		

Options Auxiliary Oven

Minimum Temperature	50 °C	**Maximum temperature**	245 °C

Accessories included for Main Oven & Hob



Rack with back and side stop	1	**Grill mesh**	1
20mm deep tray	1	**Telescopic Guide rails, total Extraction**	1
40mm deep tray	1	**Meat Probe**	1

Accessories included for Secondary Oven

Rack with back and side stop	1	**Grill mesh**	1
Wide baking tray	1	**Child lock**	1

Electrical Connection

Electrical connection rating	12000 W	**Electric cable**	Not included
Current	36 A	**Frequency**	50/60 Hz
Voltage	220-240 V	**Terminal block**	5 poles
Voltage 2 (V)	380-415 V	**Plug**	Not present

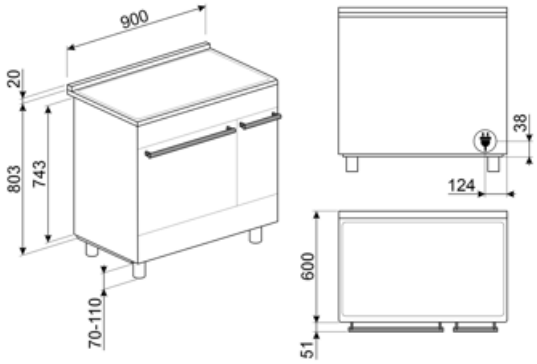

Compatible Accessories

AIRFRY2



Air fryer tray. Ideal for recreating traditional frying in the oven, but with fewer calories and less fat. It allows you to cook quickly and simply dishes such as French fries, fried vegetables and fish, ensuring perfect browning and crispiness.

BBQ



Double sided plate BBQ. Suitable for recreating succulent and crispy dishes in the oven with the typical taste of grilled cooking. The ribbed side is particularly suitable for meats and cheeses. The smooth side for fish, seafood and vegetables.

BN620-1



Enamelled tray suitable for 45 cm and 60 cm ovens. Depth 20 mm. Perfect for a wide range of savoury and sweet baking.

BN640



Enamelled tray suitable for 45cm and 60cm ovens. Depth 540 mm. Perfect for cooking and roasting meat and fish in sauces. Also ideal for experimenting with lighter and crunchy side dishes

BNP608T



Teflon-coated tray, 8 mm depth, to be placed on the grid

GRILLPLATE



Universal griddle for induction, gas, ceramic and electric hobs. Non-stick surface ideal for cooking meat, cheese and vegetables. Dimensions: 410 x 240 mm.

GTP



Partially extractable telescopic guides (1 level), suitable for traditional ovens. Made in stainless steel, they guarantee stability and facilitate the smooth extraction of the trays.

GTT



Totally extractable telescopic guides (1 level), suitable for traditional ovens. Made in stainless steel, they guarantee stability and facilitate the smooth extraction of the trays.

KIT600C92PN



KITH900CPF9



Plinth, 90cm, three sides, black, suitable for CPF9 Portofino or Sinfony C9 cookers

KITH95CPF9

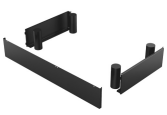

Height extension kit with plinth, (950mm), three sides, black with feet, suitable for CPF9 Portofino and Sinfony C9 cookers

KITPBX



Height reduction feet (850mm), st/steel, for Sinfonia and Master cookers (845-856mm)

KITPD



Heigh extension black feet (950 mm), black, suitable for Master, Sinfonia and Portofino 90cm (914-968mm); Heigh extension black feet (900 mm), black, suitable for Concerto cookers with 850mm height (880-935mm)

PALPZ



Pizza shovel with folding handle. Dimensions L31.5 x H32.5 cm. Easy and convenient to use and store. Perfect for serving pizza, bread and savory pastries in a safe and professional way.



SCRP

Non-scratch hob scraper - suitable for induction and ceramic hobs

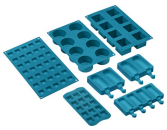

SMOLD

Set of 7 silicone moulds for ice creams, ice lollies, pralines, ice cubes or to portion food. Usable from -60°C to +230°C



SFLK1

Child lock

TPKPLATE



Universal plate for induction, gas, ceramic and electric hobs. Non-stick surface ideal for cooking fish, eggs and vegetables. Dimensions: 410 X 240 mm.

Symbols glossary



Energy efficiency class A



Child lock: some models are fitted with a device to lock the programme/cycle so it cannot be accidentally changed.



Air cooling system: to ensure a safe surface temperatures.



Quadruple glazed: Number of glazed doors.



Ever Clean Enamel: Ever Clean enamel is applied electrostatically, corner to corner and edge to edge to prevent cracking or cracks over time. It is a particular pyrolytic enamel, resistant to acids which, in addition to being pleasantly bright, promotes greater cleaning of the oven walls, thanks to its lower porosity. It is baked at over 850 °C and slowly polymerized at a scientifically determined rate to ensure uniform depth and strength. Ever Clean enamel creates an impeccable finish both on the inside of the oven and on the trays, making the surfaces of the oven incredibly easy to maintain over time as it reduces the adhesion of fat during cooking.



Fan assisted: Intense and homogeneous traditional cooking, also suitable for complex recipes. The fan is active and the heat comes from below and from above at the same time. Ventilated cooking ensures a faster and more homogeneous result, leaving fragrant foods outside and moister inside. Ideal for baked pasta, biscuits, roasts and cobblers.



Static: Traditional cooking suitable for the preparation of one dish at a time. The fan is not active and the heat comes from below and from above at the same time. Static cooking is slower and more delicate, ideal in order to get well cooked and dry dishes even inside. Ideal for cooking all types of roasts, fatty meats, bread, filled cakes.



Base: the heat comes only from the bottom of the cavity. The fan is not active. Ideal for sweet and savory pies, cobblers and pizzas. Designed to complete cooking and make food more crunchy This symbol in gas ovens indicates the gas burner.



Power booster: option allows the zone to work at full power when very intense cooking is necessary.



Installation in column: Installation in column.



Triple glazed doors: Number of glazed doors.



ECO-logic: option allows you to restrict the power limit of the appliance real energy saving.



Fan assisted base: the mix of fan and lower heating element alone allows to finish cooking foods already cooked on the surface but not internally more quickly. This system is recommended to finish cooking foods that are already well cooked on the surface, but not internally, which therefore require a moderate higher heat. Ideal for any type of food.



Static: Traditional cooking suitable for the preparation of one dish at a time. The fan is not active and the heat comes from below and from above at the same time. Static cooking is slower and more delicate, ideal in order to get well cooked and dry dishes even inside. Ideal for cooking all types of roasts, fatty meats, bread, filled cakes.



Base: the heat comes only from the bottom of the cavity. The fan is not active. Ideal for sweet and savory pies, cobblers and pizzas. Designed to complete cooking and make food more crunchy. This symbol in gas ovens indicates the gas burner.



Circulaire: it is the perfect function for cooking all types of dishes in a more delicate way. The heat comes from the back of the oven and is distributed quickly and evenly. The fan is active. It is also ideal for cooking on multiple levels without mixing smells and flavors.



ECO: low energy consumption cooking: this function is particularly suitable for cooking on a single shelf with low energy consumption. It is recommended for all types of food except those that can generate a lot of moisture (for example vegetables). To achieve maximum energy savings and reduce time, it is recommended to put the food in the oven without preheating the cooking compartment.



Fan grill: very intense heat coming only from above from a double heating element. The fan is active. It allows the optimal grilling of thickest meats. Ideal for large cuts of meat.



Turbo: the heat comes from 3 directions: above, below and from the back of the oven. The fan is active. It allows quick cooking, even on several shelves without mixing the aromas. Ideal for large volumes or foods that require intense cooking.



Induction: The work of these hobs is based on the principle of electromagnetic induction. The heat is generated directly in the bottom of the pan during its contact with the hob.



The inner door glass: can be removed with a few quick movements for cleaning.



Automatic opening: some models have Automatic opening door when the cycle is finished which is a perfect solution for handle-less kitchen units as no handle is needed. For safety reasons, the door locks automatically when the machine is in use to avoid it being opened inadvertently.



PYROLYSIS - AUTOMATIC CLEANING FUNCTION: the oven heats up to a temperature approaching 500 ° C and chars grease and food residues into a fine ash that can be easily wiped off with a damp cloth. At such a high temperature, the door locks automatically for safety, while the temperature of the door remains controlled so it is safe to touch User adjustable function based on the level of dirt present in the oven.



Removable roof liner: This is a perfect solution that protects the upper part of the cavity of the oven from pollution. Easy to remove for cleaning, it can be washed in the dishwasher.



The oven cavity has 5 different cooking levels.



Grill: Very intense heat coming only from above from a double heating element. The fan is not active. Provides excellent grilling and gratinating results. Used at the end of cooking, it gives a uniform browning to dishes.



Light



Overheat protection: The safety system that automatically turns off the hob in case of overheating of the control unit.



All glass inner door: All glass inner door, a single flat surface which is simple to keep clean.



Side lights: Two opposing side lights increase visibility inside the oven.



Overfill protection: The special overfill protection shuts down the stove in the presence of overflow of liquids.



Indication of residual heat: After the glass ceramic hob is switched off the residual heat indicator shows which of the heating zones still remains hot. When the temperature drops below 60 ° C, the indicator goes out.



The oven cavity has 4 different cooking levels.



Telescopic rails: allow you to pull out the dish and check it without having to remove it from the oven entirely.

Electronic control: Allows you to maintain temperature inside the oven with the precision 2-3 ° C. This enables to cook meals that are very sensitive to temperature changes, such as cakes, souffles, puddings.

The capacity indicates the amount of usable space in the oven cavity in litres.



The capacity indicates the amount of usable space in the oven cavity in litres.



4.3 inch display with LED technology, usability with knobs + 3 touch keys



Knobs control



Automatic merge of zones for a bigger area

Benefit (TT)

Induction hob

Induction offers fast cooking and precise temperature control

Through the use of suitable cookware, induction is easy to use and maintain, safe and responsive.

Pyrolysis

Easy oven cleaning thanks to special pyrolytic function

Touch control

Easy and intuitive timer setting with a single touch

Storage compartment

More space thanks to the lower compartment, ideal for storing accessories or cooking utensils

True-convection

The best cooking performances guaranteed by ventilated circular flow

Multiple fans and heating elements guarantee the perfect aerodynamic heat flow, allowing homogeneous and quicker cooking inside the cavity.

Multilevel cooking

Several cooking levels allow maximum flexibility of use

Multilevel halogen light

Internal halogen lighting on different levels guarantees excellent visibility

Removalble inner glass

Internal door glasses are easily removable for complete cleaning

Tangential cooling

New cooling system with tangential fan and airflow from the door to the splashback

Telescopic guides

Easy extraction and safe insertion of trays into the oven thanks to telescopic guides

Adjustable height

Cooker top flushed with the working area thanks to adjustable feet

AirFry (AIRFRY optional accessory)

Lighter and tastier food thanks to airfry basket (optional accessory)

Cold door

During any function, the external door glass is cold, avoiding any risk of burns

Isothermic Cavity

The best cooking performance at the highest energy efficiency

Pizza stone (optional accessory)

Baking with refractory stone for soft and crispy pizza and yeast products (STONE optional accessory)

BBQ (optional accessory)

Barbecue cooking directly in the oven with the double-sided grill (BBQ optional accessory)

Single turbine

The oven has a fan equipped with a circular heating element allowing cooking with rotating heat