C9IMX2

Cooker size	90x60 cm
N. of cavities with energy label	1
Cavity heat source	ELECTRICITY
Hob type	Induction
Type of main oven	Thermo-ventilated
Cleaning system main oven	Vapor Clean
EAN code	8017709321314
Energy efficiency class	A



Aesthetics

Design	Square design	**Type of control knobs**	Smeg Classic
Command panel finish	Finger friendly stainless steel	**Controls colour**	Stainless steel
		No. of controls	7
Aesthetic	Classica	**Serigraphy colour**	Black
Logo	Assembled st/steel	**Display name**	DigiScreen
Colour	Stainless Steel	**Door**	With 2 horizontal strips
Logo position	Facia below the oven	**Glass type**	Eclipse
Finishing	Satin	**Handle**	Smeg Classic
Series	Sinfonia	**Handle Colour**	Brushed stainless steel
Hob colour	Stainless steel	**Storage compartment**	Door
Type of control setting hob	Control knobs	**Feet color**	Silver
Hob LED colours	Red		

Programs / Functions main oven

No. of cooking functions 9

Traditional cooking functions

- Static
- Fan assisted
- Circulaire
- Eco
- Small grill
- Large grill
- Fan grill (large)
- Base
- Fan assisted base

Other functions

Defrost by time

Cleaning functions

Vapor clean

Hob options

Control lock	Yes	**Limited Power Consumption Mode in W**	3700, 4800, 7400 W
Limited Power Consumption Mode	Yes	**Multizone Option**	Yes

Hob technical features

Total no. of cook zones 5

Front left - Induction - multizone - 2.10 kW - Booster 2.30 kW - 21.0x19.0 cm
Rear left - Induction - multizone - 1.60 kW - Booster 1.85 kW - 21.0x19.0 cm
Central - Induction - single - 2.30 kW - Booster 3.00 kW - Ø 27.0 cm
Rear right - Induction - single - 1.20 kW - Booster 1.40 kW - Ø 18.0 cm
Front right - Induction - single - 2.30 kW - Booster 3.00 kW - Ø 21.0 cm

No. of cooking zones with Booster	5	**Minimum pan diameter indication**	Yes
Number of Flexible zones	1	**Selected zone indicator**	Yes
Automatic switch off when overheat	Yes	**Residual heat indicator**	Yes
Automatic pan detection	Yes		

Main Oven Technical Features

No. of lights	2	**Removable inner door**	Yes
Fan number	2	**Total no. of door glasses**	3
Net volume of the cavity	115 l	**No.of thermo-reflective door glasses**	2
Gross volume, 1st cavity	129 l	**Safety Thermostat**	Yes
Cavity material	Ever Clean enamel	**Cooling system**	Tangential
No. of shelves	5	**Usable cavity space dimensions (HxWxD)**	371x724x418 mm
Type of shelves	Metal racks	**Temperature control**	Electro-mechanical
Light type	Halogen	**Lower heating element power**	1700 W
Light Power	40 W	**Upper heating element - Power**	1200 W
Cooking time setting	Start and Stop		
Light when oven door is open	Yes		
Door opening	Flap down		

		Grill element	1700 W
Removable door	Yes	**Large grill - Power**	2900 W
Full glass inner door	Yes	**Circular heating element - Power**	2 x 1550 W
		Grill type	Electric

Options Main Oven

Timer	Yes	**Minimum Temperature**	50 °C
End of cooking acoustic alarm	Yes	**Maximum temperature**	260 °C

Accessories included for Main Oven & Hob



Rack with back and side stop	1	**Grill mesh**	1
20mm deep tray	1	**Telescopic Guide rails, total Extraction**	1
40mm deep tray	1	**Meat Probe**	1

Electrical Connection

Electrical connection rating	10600 W	**Additional connection modalities**	Double and Three Phase
Current	46 A	**Frequency**	50/60 Hz
Voltage	220-240 V	**Terminal block**	5 poles
Voltage 2 (V)	380-415 V	**Plug**	Not present
Electric cable	Not included		

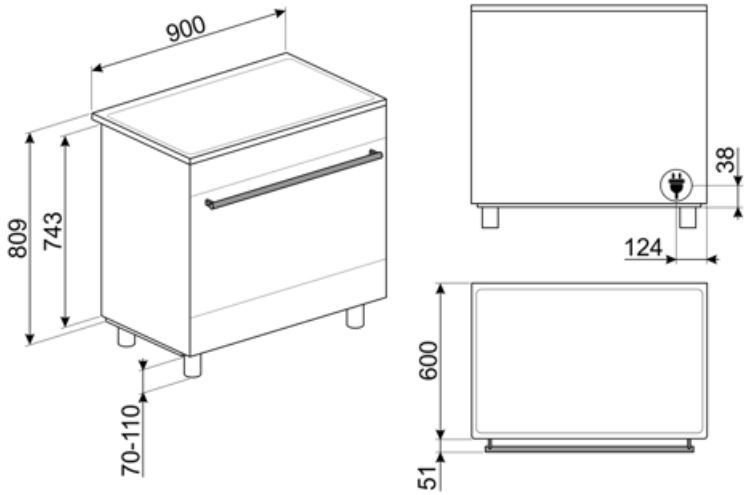
900
809
743
70-110
38
124
600
51

Compatible Accessories



AIRFRY9

Air fryer rack AIRFRY . Ideal for recreating traditional frying in the oven, but with fewer calories and less fat. It allows you to cook quickly and simply dishes such as French fries, fried vegetables and fish, ensuring perfect browning and crispiness.



BBQ9

teflon-coated aluminum grid for 90 cm cavity



BN940

Enamelled tray 90 cm, 40 mm deep



GTP

Partially extractable telescopic guides (1 level), suitable for traditional ovens. Made in stainless steel, they guarantee stability and facilitate the smooth extraction of the trays.

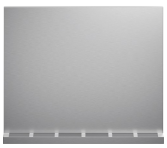

KITC9X9-1

Splashback kit, st/steel, 90cm, suitable for Portofino Multifunction, Master and Sinfonia cookers

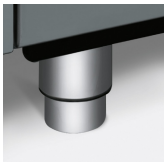

KITPAX

Heigh extension feet, stainless steel, (950mm) suitable for Master, Sinfonia and Portofino 90cm cookers (914-968mm); Heigh extension feet (900mm), st/steel, suitable for Concerto cookers with 850mm height (880-935mm)



PALPZ

Pizza shovel with folding handle. Dimensions L31.5 x H32.5 cm. Easy and convenient to use and store. Perfect for serving pizza, bread and savory pastries in a safe and professional way.



SFLK1

Child lock



BBQ

Double sided plate BBQ. Suitable for recreating succulent and crispy dishes in the oven with the typical taste of grilled cooking. The ribbed side is particularly suitable for meats and cheeses. The smooth side for fish, seafood and vegetables.



BN920

Enamelled tray 90cm cavity, 20mm deep



GRILLPLATE

Universal griddle for induction, gas, ceramic and electric hobs. Non-stick surface ideal for cooking meat, cheese and vegetables. Dimensions: 410 x 240 mm.



GTT

Totally extractable telescopic guides (1 level), suitable for traditional ovens. Made in stainless steel, they guarantee stability and facilitate the smooth extraction of the trays.

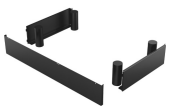

KITH95CPF9

Height extension kit with plinth, (950mm), three sides, black with feet, suitable for CPF9 Portofino and Sinfony C9 cookers



KITPBX

Height reduction feet (850mm), st/steel, for Sinfonia and Master cookers (845-856mm)



SCRP

Non-scratch hob scraper - suitable for induction and ceramic hobs

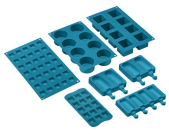

SMOLD

Set of 7 silicone moulds for ice creams, ice lollies, pralines, ice cubes or to portion food. Usable from -60°C to +230°C

TPKPLATE



Universal plate for induction, gas, ceramic and electric hobs. Non-stick surface ideal for cooking fish, eggs and vegetables. Dimensions: 410 X 240 mm.

Alternative products



C9IMMB2

Colour: Matt Black



C9IMN2

Colour: Matt Black

Symbols glossary



Automatic merge of zones for a bigger area



Energy efficiency class A



Installation in column: Installation in column.



Defrost by time: Manual defrost function. At the end of the set duration, the function stops.



ECO-logic: option allows you to restrict the power limit of the appliance real energy saving.



Fingerprint proof stainless steel: Fingerprint proof stainless steel keeps stainless steel looking as good as new.



Fan assisted: Intense and homogeneous traditional cooking, also suitable for complex recipes. The fan is active and the heat comes from below and from above at the same time. Ventilated cooking ensures a faster and more homogeneous result, leaving fragrant foods outside and moister inside. Ideal for baked pasta, biscuits, roasts and cobblers.



Base: the heat comes only from the bottom of the cavity. The fan is not active. Ideal for sweet and savory pies, cobblers and pizzas. Designed to complete cooking and make food more crunchy. This symbol in gas ovens indicates the gas burner.



Power booster: option allows the zone to work at full power when very intense cooking is necessary.



Child lock: some models are fitted with a device to lock the programme/cycle so it cannot be accidentally changed.



Air cooling system: to ensure a safe surface temperatures.



Triple glazed doors: Number of glazed doors.



Ever Clean Enamel: Ever Clean enamel is applied electrostatically, corner to corner and edge to edge to prevent cracking or cracks over time. It is a particular pyrolytic enamel, resistant to acids which, in addition to being pleasantly bright, promotes greater cleaning of the oven walls, thanks to its lower porosity. It is baked at over 850 °C and slowly polymerized at a scientifically determined rate to ensure uniform depth and strength. Ever Clean enamel creates an impeccable finish both on the inside of the oven and on the trays, making the surfaces of the oven incredibly easy to maintain over time as it reduces the adhesion of fat during cooking.



Fan assisted base: the mix of fan and lower heating element alone allows to finish cooking foods already cooked on the surface but not internally more quickly. This system is recommended to finish cooking foods that are already well cooked on the surface, but not internally, which therefore require a moderate higher heat. Ideal for any type of food.



Static: Traditional cooking suitable for the preparation of one dish at a time. The fan is not active and the heat comes from below and from above at the same time. Static cooking is slower and more delicate, ideal in order to get well cooked and dry dishes even inside. Ideal for cooking all types of roasts, fatty meats, bread, filled cakes.



Circulaire: it is the perfect function for cooking all types of dishes in a more delicate way. The heat comes from the back of the oven and is distributed quickly and evenly. The fan is active. It is also ideal for cooking on multiple levels without mixing smells and flavors.

ECO: low energy consumption cooking: this function is particularly suitable for cooking on a single shelf with low energy consumption. It is recommended for all types of food except those that can generate a lot of moisture (for example vegetables). To achieve maximum energy savings and reduce time, it is recommended to put the food in the oven without preheating the cooking compartment.

Half grill: For rapid cooking and browning of foods. Best results can be obtained by using the top shelf for small items, the lower shelves for larger ones, such as chops or sausages. For half grill heat is generated only at the centre of the element, so is ideal for smaller quantities.

Overheat protection: The safety system that automatically turns off the hob in case of overheating of the control unit.

All glass inner door: All glass inner door, a single flat surface which is simple to keep clean.

Side lights: Two opposing side lights increase visibility inside the oven.

Indication of residual heat: After the glass ceramic hob is switched off the residual heat indicator shows which of the heating zones still remains hot. When the temperature drops below 60 ° C, the indicator goes out.

Telescopic rails: allow you to pull out the dish and check it without having to remove it from the oven entirely.

The capacity indicates the amount of usable space in the oven cavity in litres.

Knobs control

Grill: Very intense heat coming only from above from a double heating element. The fan is not active. Provides excellent grilling and gratinating results. Used at the end of cooking, it gives a uniform browning to dishes.

Fan grill: very intense heat coming only from above from a double heating element. The fan is active. It allows the optimal grilling of thickest meats. Ideal for large cuts of meat.

Induction: The work of these hobs is based on the principle of electromagnetic induction. The heat is generated directly in the bottom of the pan during its contact with the hob.

The inner door glass: can be removed with a few quick movements for cleaning.

Automatic opening: some models have Automatic opening door when the cycle is finished which is a perfect solution for handle-less kitchen units as no handle is needed. For safety reasons, the door locks automatically when the machine is in use to avoid it being opened inadvertently.

The oven cavity has 5 different cooking levels.

Vapor Clean: a simple cleaning function using steam to loosen deposits in the oven cavity.

4.3 inch display with LED technology, usability with knobs + 3 touch keys