CB2485U



Product Family	Refrigerator
Installation	Built-in
Category	Bottom Mount
Cooling type	Fan assisted refrigerator, no-frost freezer
Defrost	Automatic
Hinge type	Door on door
Hinge position	Right
Reversible door	Yes
EAN code	8017709306045

Aesthetics

Material	Stainless steel	**Color of glass shelf profile**	Silver
Side material	Steel	**Display**	LED
Logo	Silk screen	**Display porition**	Interno (sul Top)
Door shelves profile color	Silver		

Refrigerator compartment features

Number of compartments	2	**Crisper Cover**	Yes
Compartment types	Low temperature compartment, Fruit and vegetable compartment	**Low temperature compartment**	Yes
No. of adjustable shelves	3	**Internal light in fridge**	Yes
Number of fruit and vegetables drawers	1	**Type of internal light (fridge)**	LED
Shelves material	Glass		

Refrigerator Inner Door

Number of adjustable door shelves	2	**No. of bottle shelves**	1

Other Refrigerator features



Humidity Control	Yes	**MultiFlow**	Metal
Accessories	Egg tray	**Fan**	Yes

Freezer compartment features

Number of drawers	3

Other Freezer features



Accessories	1 ice box	**Fast freezing compartment**	Yes

Other technical features



Functions display	Holiday, Fast freezing, Fast cooling, ECO
Fast freezing button	Yes
Power on lamp	Yes
Door open alarm	Yes
Type of temperature control	Electronic
No. of compressors	1
Refrigerant gas type	R600a
Max weight door panel (fridge)	37 lbs
Foam agent	Cyclopentane
Max weight door panel (freezer)	26 lbs

Performance / Energy Label - Reg. 2019

Airborne acoustical noise emissions	40 dB(A) re 1 pW

Electrical Connection

Electrical connection rating	160 W	**Frequency (Hz)**	60 Hz
Current	0,4 A	**Power supply cable length**	70 7/8 "
Voltage (V)	115 V	**Plug**	(B) NEMA 5-15P

Logistic Information

Width	21 1/4 "	**Height**	69 15/16 "
Depth without handle	21 5/8 "		

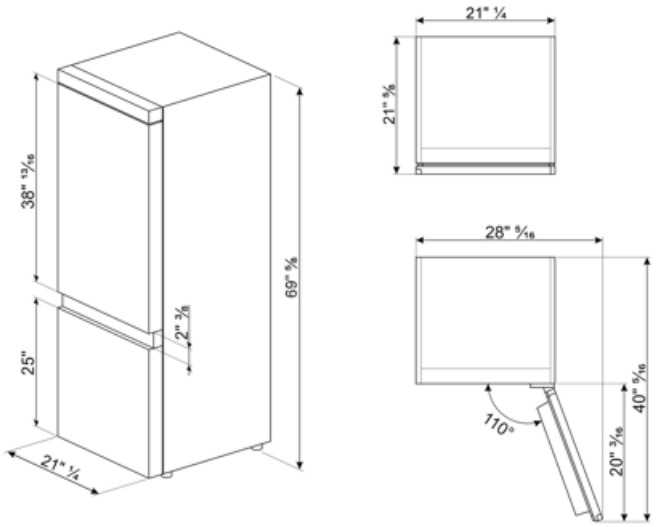

Symbols glossary



4 stars freezing compartment for better food preservation.



LED display: to show programmes, functions and options selected and the time to the end of the cycle.



Ventilated: Forced distribution of cold air in the refrigerator compartment, which allows even temperature distribution within the fridge.



Power saving mode: The power saving mode allows you to disable the refrigerator and keep the freezer working.



Built-in niche



Multiflow Cooling System: the Multiflow ventilation system allows an even distribution of cool air around the fridge cabinet. The stainless steel panel gives a more premium look to the appliance.



The automatic defrost system works by automatically defrosting at regular intervals eliminating the need to defrost altogether.



Economical mode: Analyzes fridge functioning during the activation and optimizes the operating cycle in order to reduce power consumption.



Fast freezing: The fast freezing function brings the temperature of the compartment down when activated a few hours prior to usage.



LED interior lighting: is a more energy efficient and long lasting way of illuminating the interior of the appliance.



No Frost: The No Frost and Frost free systems prevent ice from forming so that no defrosting is required.