CB3620UWI



Product Family	Refrigerator
Installation	Built-in
Category	Bottom Mount
Built-in niche	>200
Reference width	Higher than 80 cm
Reference height	Higher than 200 cm
Sistema Total No - Frost	Total
Cooling type	Total No Frost - Double Cooling system
Defrost	Automatic
Hinge type	Door on door
Slot-in	Yes
Kitchen panel	Not supplied
Hinge position	Right
Reversible door	Yes
EAN code	8017709350703

Aesthetics

Aesthetic	Universale	**Color of glass shelf profile**	Silver
Material	Plastic	**Display**	LED
Side material	Plastic	**Display porition**	Internal (belt-line)
Door shelves profile color	Silver	**Water Filter**	Yes
Drawers profile color	Silver		

Refrigerator compartment features

Number of compartments	2	**Type of crisper/vegetable drawers cover**	Glass
Compartment types	Fruit and vegetable compartment, Variable temperature compartment between -1° and 5°	**No. of lights refrigerator compartment**	3
No. of adjustable shelves	2	**Low temperature compartment**	Yes
Number of fruit and vegetables drawers	1	**Internal light in fridge**	Yes
Shelves material	Glass	**Type of internal light (fridge)**	LED
Type of crisper/vegetable drawers cover	On sliding rails	**Dispenser**	Ice & water
Crisper Cover	Yes	**Dispenser Location**	Internal

Refrigerator Inner Door

Number of adjustable door shelves	2

Other Refrigerator features



MultiFlow	Yes	**Fan**	Yes

Freezer compartment features

Number of drawers	2	**Internal light in freezer**	Yes
No. of lights freezer compartment	1	**Type of internal light (freezer)**	LED

Other Freezer features

Accessories	1 ice box	**Daily ice production**	1,77 kg
Ice maker	Automatic	**Ice shape**	Cubes
Ice Maker Location	Internal	**Ice tray shelf**	Yes

Other technical features

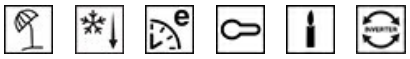

Functions display	Holiday, Fast freezing, ECO, Control lock, Sabbath
Fast freezing button	Yes
Water network connection	Yes
Power on lamp	Yes
Type of temperature control	Electronic
No. of compressors	1
Refrigerant gas type	R600a
Type of compressor	Inverter
Refrigerant Quantity (gr)	3.0 oz
Max weight door panel (fridge)	55 lbs
Foam agent	Cyclopentane
Max weight door panel (freezer)	22 lbs

Performance / Energy Label - Reg. 2019

Annual energy consumption	500 kWh/year	**Airborne acoustical noise emissions**	43 dB(A) re 1 pW
Total net volume	19.8 cu. ft.	**Temperature Rise Time**	11 h
		Climate class	T

Sum of the volumes of the frozen compartment(s)	5.6 cu. ft.
Sum of the volumes of the chill compartment(s) and the unfrozen compartment(s)	14.2 cu. ft.

Electrical Connection

Current	2,6 A	**Power supply cable length**	90 9/16 "
Voltage (V)	120 V	**Plug**	(B) USA 120V
Frequency (Hz)	60 Hz		

Logistic Information

Width	35 3/4 "	**Depth of the built-in niche**	25 "
Width of the built-in niche	36 "	**Height**	83 9/16 "
Depth without handle	23 5/16 "	**Height of the built-in niche**	84 "

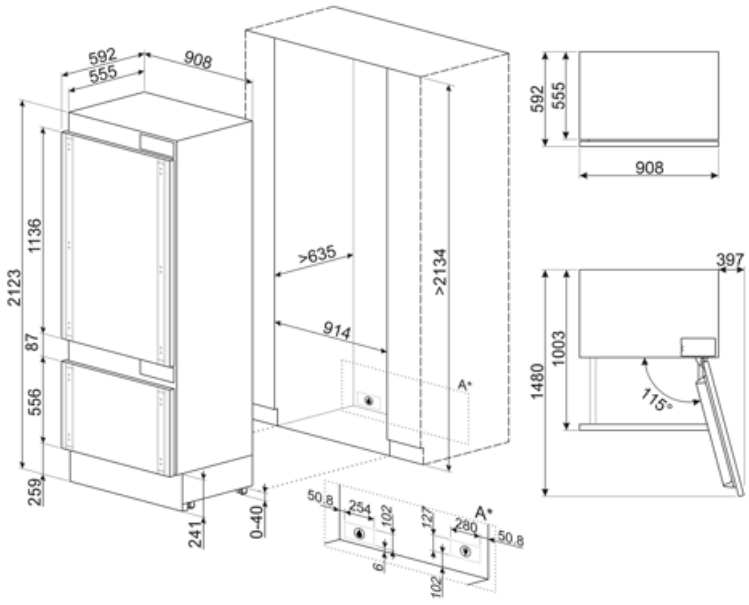

Symbols glossary



ADA-compliant home appliances are designed to meet the accessibility standards outlined in the Americans with Disabilities Act (ADA). These appliances are made with features that make them more accessible to individuals with disabilities, particularly those with mobility, vision, or hearing impairments.



Child lock: some models are fitted with a device to lock the programme/cycle so it cannot be accidentally changed.



Economical mode: Analyzes fridge functioning during the activation and optimizes the operating cycle in order to reduce power consumption.



Fast freezing: The fast freezing function brings the temperature of the compartment down when activated a few hours prior to usage.



LED interior lighting: is a more energy efficient and long lasting way of illuminating the interior of the appliance.



Air plus: keeps food fresher for longer.



Slot-in: The refrigerators with Slot-in opening can be perfectly integrated into the furniture structure, as the doors open at 90° do not go beyond the side of the product. In case of installation next to the wall, it will be necessary to consider the dimensions of the handle in order to open the door at 90 °.



The automatic defrost system works by automatically defrosting at regular intervals eliminating the need to defrost altogether.



LED display: to show programmes, functions and options selected and the time to the end of the cycle.



Ventilated: Forced distribution of cold air in the refrigerator compartment, which allows even temperature distribution within the fridge.



Power saving mode: The power saving mode allows you to disable the refrigerator and keep the freezer working.



Smeg's evolution towards more intelligent and eco-friendly models has led to the choice of Inverter technology, which significantly reduces consumption.



SABBATH: function that allows to cook food respecting Judaism's day of rest provisions.