CMS8451P

Product Family	Coffee machine
Type	Automatic
Category	45 cm compact



Aesthetics

Aesthetic	Coloniale	**Components finishing**	Antique brass
Colour	Cream	**Logo**	Silk screen

Controls

Display	White LCD on black background (2 lines)	**Control knobs**	Colonial
		Controls colour	Old Brass
No. of display languages	13	**No. of buttons**	8
		Button colour	Brass effect
Display languages	IT, GB, FR, NL, SP, PT, SWE, RU, DE, CZ, DK, GR, PL	**Other controls included**	Cortina - Cream/Old brass
Type of control setting	Control knobs / buttons		
No. of controls	2		

Program / Functions

N° drinks	4
Coffee function (single)	
Coffee function (double)	
Pre-heat infuser function	Yes
Automatic Cappuccino maker with separate tank for milk	Yes
Hot water function: for Tea or other drinks	

Ground coffee option	
Adjustable coffee intensity	
Variable coffee length	
Adjustable cappuccino foam	
Programmed automatic switch-on	
Automatic rinsing	
Automatic descaling	
Variable coffee temperature	2 levels
Adjustable coffee grinder	Yes
Water hardness	Yes
Lack of water signal	Yes
Child lock	Yes

Technical Features



Coffee granules compartment	Yes
Ground coffee compartment	Yes
Removable water container	Yes
Used coffee waste container	Yes (14 single, 7 double)
Height-adjustable coffee spout	Yes
Steam dispenser	Yes
Drip tray	Yes
Removable milk jug	Yes

Grinder	Semiprofessional stainless steel conical grinder
Pump pressure	15 bar
Water container capacity	2.50 l
Coffee granule container capacity	220 g
Light Type	LED
Lights	2
Installation	On telescopic guides with soft closing

Electrical Connection

Plug	(F;E) Schuko
Nominal power	1350 W
Current	5.6 A
Voltage (V)	220-240 V
Frequency (Hz)	50-60 Hz
Power supply cable length	180 cm

Logistic Information

Width (mm)	595 mm
Depth (mm)	380 mm
Height (mm)	455 mm

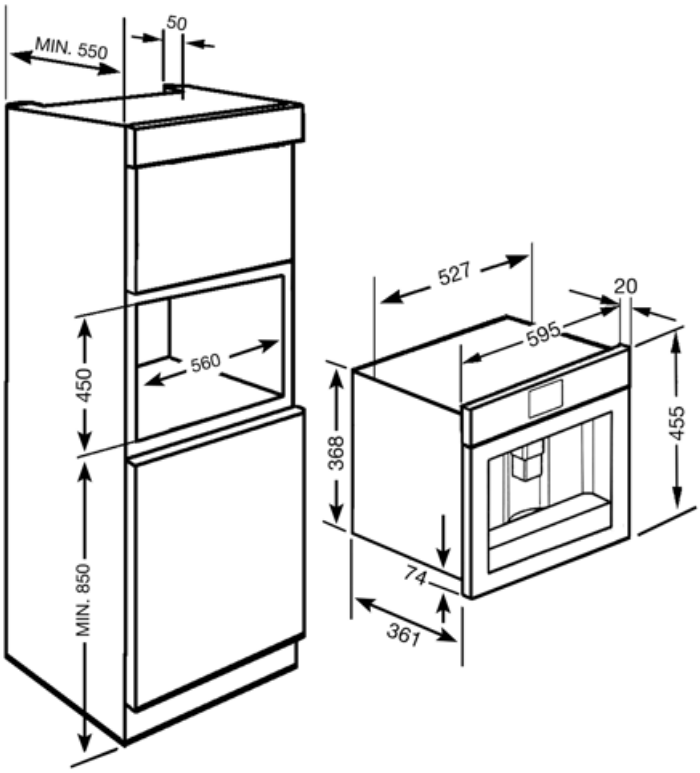
MIN. 550
50
450
560
MIN. 850
527
20
595
368
455
74
361

Compatible Accessories

KITCABLE90UK

Cable with IEC connector and UK plug

Alternative products



CMS8451A

Colour: Anthracite

Symbols glossary



Rinsing: There in an automatic rinsing with hot water when the coffee machine is switched on.



Semiprofessional steamer with a dedicated heating element to manage the steam outlet. Suitable for recipes such as hot chocolate, punch, bombardino, vin brulé.



Types of coffee: You can prepare the following types of coffee: Ristretto-Corto (small portion) /Normale (medium portion) / Lungo (large portion).



Coffee beans: You can use coffee beans in the coffee machine with the possibility to adjust the coarseness of grind.



LCD display: to optimize performance and simplify the use of the appliance.



Ground coffee: You can use ground coffee or coffee beans in the coffee machine with the possibility to adjust the coarseness of grind.



Hot water: Coffee machine can make hot water for tea or other hot drinks



Side lights: Two opposing side lights increase visibility inside the oven.



Automatic switch on: It is possible to program automatic switch on of the machine to make it ready for use by the required time.



Types of coffee: You can prepare the following types of coffee: Ristretto-Corto (small portion) /Normale (medium portion) / Lungo (large portion).



The double coffee function makes possible to prepare two espresso at the same time with just one infusion cycle.



Descaling function: Is essential to remove excess deposits of limestone in the tank and allow the proper operation of the product. The need to perform this operation is signaled by the product itself.



Conical stainless steel coffee grinder.



Compact appliances with a height of 45 cm - perfect solution to meet the functional requirements of kitchen sets of small height. Available in several types and in different styles.



5 levels adjustable coffee intensity. This function makes possible to adjust the quantity of beans grounded in any infusion cycle.



The milk floth is adjustable through the thermal carafe knob.