CMSU4104S

Product Family	Coffee machine
Type	Automatic
Category	45 cm compact



Aesthetics

Aesthetic	Linea	**Serie**	2
Colour	Silver	**Type of steel**	Brushed
Finishing	Glossy	**Logo**	Silk screen

Controls

Display	4,3'' TFT colour soft touch	**Display languages**	IT, GB, FR, NL, SP, PT, SWE, RU, DE, DK, PL, NO, FI, TR, ET, KK, UK
No. of display languages	17	**Type of control setting**	Touch control

Program / Functions

N° drinks	
Coffee function (single)	
Coffee function (double)	
Pre-heat infuser function	Yes
Automatic Cappuccino maker with separate tank for milk	Yes
Hot water function: for Tea or other drinks	
Ground coffee option	
Adjustable coffee intensity	

Variable coffee length	
Adjustable cappuccino foam	
Programmed automatic switch-on	
Automatic rinsing	
Automatic descaling	
Variable coffee temperature	
Adjustable coffee grinder	
Water hardness	Yes
Lack of water signal	Yes
Child lock	Yes
Demo mode	Yes

Technical Features



Coffee granules compartment	Yes
Ground coffee compartment	Yes
Removable water container	Yes
Used coffee waste container	Yes (14 single, 7 double)
Height-adjustable coffee spout	Yes, 85-142 mm
Steam dispenser	Yes
Drip tray	Yes
Removable milk jug	Yes
Thermal carafe	Yes, stainless steel 0,5 L with autoclean system

Cup holder	Yes, warmed
Heating system	Thermoblock + Steamer
Grinder	Semiprofessional stainless steel conical grinder
Pump pressure	217.6 psi
Water container capacity	0.6 gal
Coffee granule container capacity	12.3 oz
Light Type	LED
Lights	4
Installation	On telescopic guides with soft closing

Electrical Connection

Plug	No
Nominal power	1350 W
Current	12 A
Voltage (V)	120 V
Frequency (Hz)	60 Hz
Power supply cable length	70 7/8 "

Logistic Information

Width (mm)	23 7/16 "
Depth (mm)	18 1/2 "
Height (mm)	17 15/16 "

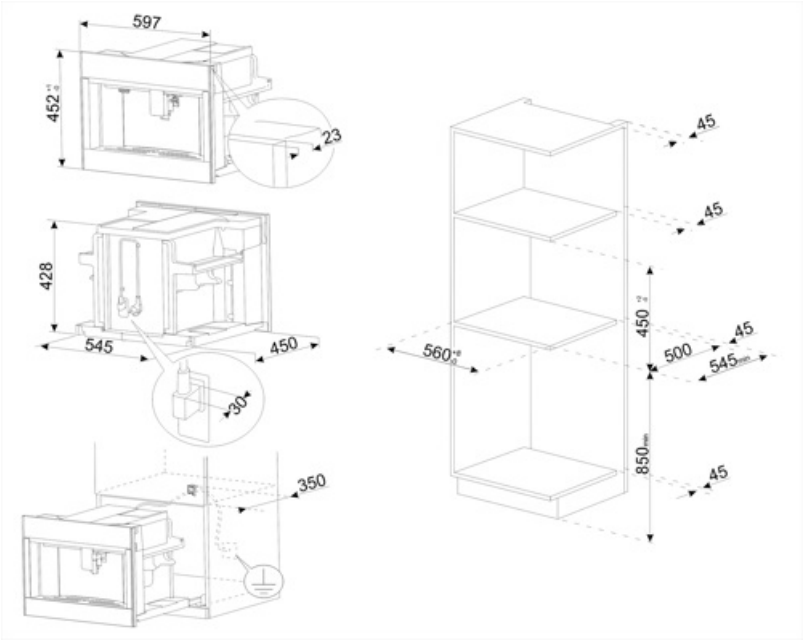
597
452
23
428
545
450
30
350
45
45
450
45
560
500
545
850
45

Symbols glossary



Rinsing: There in an automatic rinsing with hot water when the coffee machine is switched on.



Brewing temperature between 88 and 96°C.



Semiprofessional steamer with a dedicated heating element to manage the steam outlet. Suitable for recipes such as hot chocolate, punch, bombardino, vin brulé.



The double coffee function makes possible to prepare two espresso at the same time with just one infusion cycle.



Integrated cup warmer.



Frontal approach: it possible to reach every point in the machine and extract any components with a single hand use.



Conical stainless steel coffee grinder.



Compact appliances with a height of 45 cm - perfect solution to meet the functional requirements of kitchen sets of small height. Available in several types and in different styles.



5 levels adjustable coffee intensity. This function makes possible to adjust the quantity of beans grounded in any infusion cycle.



13 levels adjustable grinder.



The milk floth is adjustable through the thermal carafe knob.



Touch controls: Easy to use touch controls allow the appliance to be programmed at the touch of a button.



Automatic switch on: It is possible to program automatic switch on of the machine to make it ready for use by the required time.



Three levels adjustable coffee temperature to taste the coffee on the temperature desired.



Types of coffee: You can prepare the following types of coffee: Ristretto-Corto (small portion) /Normale (medium portion) / Lungo (large portion)



Coffee beans: You can use coffee beans in the coffee machine with the possibility to adjust the coarseness of grind.



Descaling function: Is essential to remove excess deposits of limestone in the tank and allow the proper operation of the product. The need to perform this operation is signaled by the product itself.



Milk froth temperature 60°C.



Ground coffee: You can use ground coffee or coffee beans in the coffee machine with the possibility to adjust the coarseness of grind.



Hot water: Coffee machine can make hot water for tea or other hot drinks



Five levels adjustable coffee length: espresso, normal, long, extra long and Americano.



The machine guarantees to create different drinks: espresso, coffee, long, 2 x espresso, espresso macchiato, americano, cappuccino, cappuccino mix, caffelatte, latte macchiato, hot milk, flat white, hot water.



Stainless steel thermal carafe. It guarantees to maintain longer the milk fresh. Fitted with an auto-clean system and a knob to adjust the milk froth, it can be washed in the dishwasher.