COLPTX

Tipología Drainer
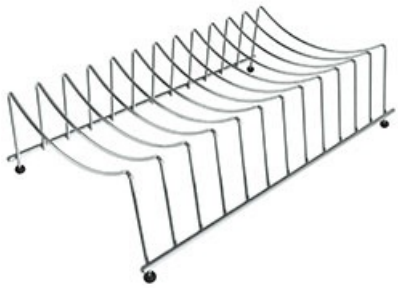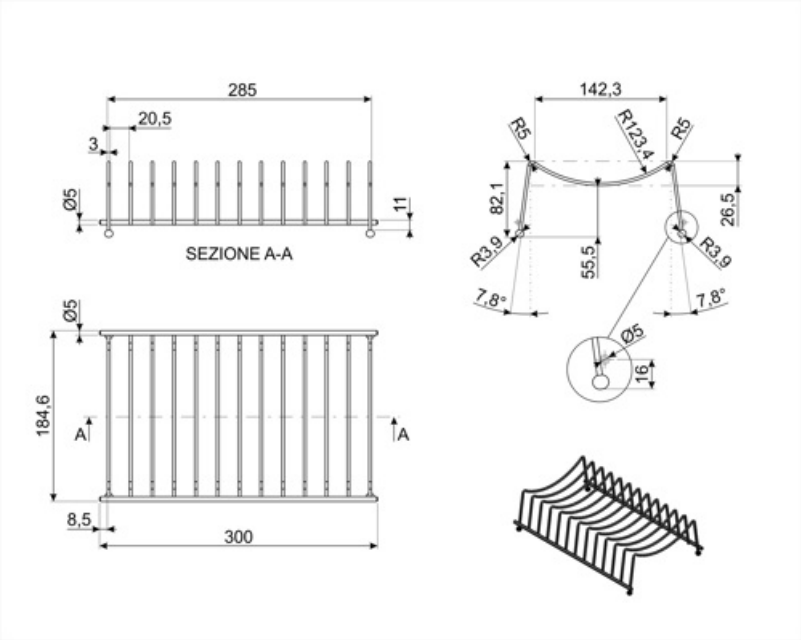
Draining rack base 300 x 185 x 82 mm