CPF120IGMPWH

Cooker size	120x60 cm
N. of cavities with energy label	2
Cavity heat source	ELECTRICITY
Hob type	Mixed
Type of main oven	Thermo-ventilated
Type of second oven	Thermo-ventilated
Cleaning system main oven	Pyrolitic
EAN code	8017709286071
Energy efficiency class	A+
Energy efficiency class, second cavity	A



Aesthetics

Design	Flush fit	**Controls colour**	Stainless steel
Command panel finish	Enamelled metal	**No. of controls**	11
Aesthetic	Portofino	**Serigraphy colour**	Black
Logo	Assembled st/steel	**Display name**	DigiScreen
Colour	White	**Door**	With frame
Logo position	Facia below the oven	**Glass type**	Black
Upstand	Yes	**Handle**	Smeg Portofino
Hob colour	Stainless steel	**Handle Colour**	White
Type of pan stands	Cast Iron	**Storage compartment**	Drawer
Type of control setting hob	Control knobs	**Sliding compartment**	Yes
Type of control knobs	Smeg Portofino	**Plinth**	Black

Programs / Functions main oven

No. of cooking functions	9

Traditional cooking functions

- Static
- Fan assisted
- Circulaire
- Turbo
- Eco
- Small grill
- Large grill
- Fan grill (large)
- Fan assisted base

Cleaning functions

Pyrolytic

Programs / Functions auxiliary oven

Cooking functions cavity 2 8

Traditional cooking functions, cavity 2

Static

Fan assisted

Circulaire

Eco

Large grill

Fan grill (large)

Fan-assisted bottom

Cooking functions with Direct Steam technology

Fan forced (circular heating + fan)

Cleaning functions cavity 2

Vapor clean

Hob technical features

Total no. of cook zones 6

Centrale sinistra - Gas - 2UR (dual) - 4.20 kW
Front centre - Gas - Semi Rapid - 1.80 kW
Rear centre - Gas - Rapid - 3.00 kW
Front right - Induction - multizone - 2.10 kW - Booster 2.30 kW - 21.1x19.1 cm
Rear right - Induction - multizone - 1.60 kW - Booster 1.85 kW - 21.0x19.0 cm
Central - Heating element - Teppanyaki griddle - 1.40 kW

Number of Flexible zones	1	**Automatic pan detection**	Yes
Type of gas burners	Standard	**Minimum pan diameter indication**	Yes
Automatic electronic ignition	Yes	**Selected zone indicator**	Yes
Burner caps	Matt black enamelled	**Residual heat indicator**	Yes
Automatic switch off when overheat	Yes		

Main Oven Technical Features

No. of lights 2

Total no. of door glasses 4

Fan number	1
Net volume of the cavity	70 l
Gross volume, 1st cavity	79 l
Cavity material	Ever Clean enamel
No. of shelves	5
Type of shelves	Metal racks
Light type	Halogen
Light Power	40 W
Cooking time setting	Start and Stop
Light when oven door is open	Yes
Door opening	Flap down
Removable door	Yes
Full glass inner door	Yes
Removable inner door	Yes
No.of thermo-reflective door glasses	3
Safety Thermostat	Yes
Heating suspended when door is opened	Yes
Cooling system	Tangential
Door Lock During Pyrolisis	Yes
Usable cavity space dimensions (HxWxD)	360X460X425 mm
Temperature control	Electro-mechanical
Lower heating element power	1200 W
Upper heating element - Power	1000 W
Grill element	1700 W
Large grill - Power	2700 W
Circular heating element - Power	2000 W
Grill type	Electric
Soft Close system	Yes

Options Main Oven

Timer	Yes
End of cooking acoustic alarm	Yes
Minimum Temperature	50 °C
Maximum temperature	280 °C

Second Oven Technical Features



Net volume of the second cavity	63 l
Gross volume, 2nd cavity	79 l
Cavity material	Ever Clean enamel
No. of shelves	5
Type of shelves	Metal racks
No. of lights	2
Light type	Halogen
Light Power	40 W
Cooking time setting	Start and Stop
Light when oven door is open	Yes
Door opening	Flap down
Removable door	Yes
Full glass inner door	Yes
Removable inner door	Yes
No. total door glasses	3
No. thermo-reflective door glasses	2
Safety Thermostat	Yes
Heating suspended when door is opened	Yes
Cooling system	Tangential
Usable cavity space dimensions (HxWxD)	360X460X425 mm
Temperature control	Electro-mechanical
Lower heating element - power	1200 W
Upper heating element - Power	1000 W
Grill element - power	1700 W
Large grill - Power	2700 W
Circular heating element - Power	2000 W
Grill type	Electric
Tilting grill	Yes
Soft Close system	Yes

Options Auxiliary Oven

Timer	Yes	**Minimum Temperature**	50 °C
End of cooking acoustic alarm	Yes	**Maximum temperature**	260 °C

Accessories included for Main Oven & Hob



Rack with back and side stop	1	**Grill mesh**	1
20mm deep tray	1	**Telescopic Guide rails, total Extraction**	1
40mm deep tray	1	**Meat Probe**	1

Accessories included for Secondary Oven



Rack with back and side stop	1	**Grill mesh**	1
20mm deep tray	1	**Telescopic Guide rails, total Extraction**	1
40mm deep tray	1		

Electrical Connection

Electrical connection rating	10900 W	**Cable testing**	Yes, Single phase
Current	32 A	**Additional connection modalities**	Double and Three Phase
Voltage	220-240 V	**Frequency**	50/60 Hz
Voltage 2 (V)	380-415 V	**Terminal block**	5 poles
Electric cable	Not included	**Plug**	Not present

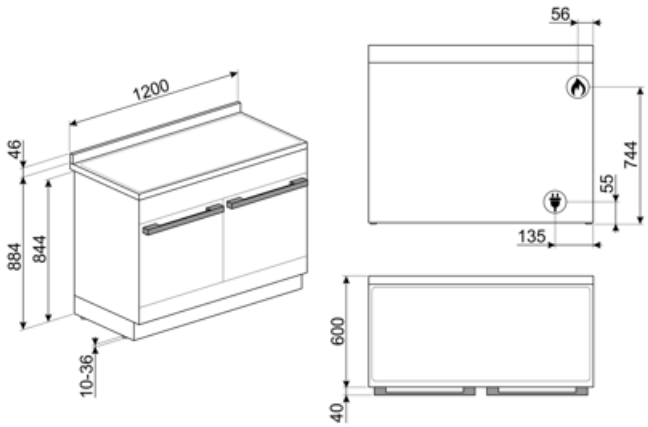
1200
46
884
844
10-36
56
744
55
135
600
40

Compatible Accessories



AIRFRY2

Air fryer tray. Ideal for recreating traditional frying in the oven, but with fewer calories and less fat. It allows you to cook quickly and simply dishes such as French fries, fried vegetables and fish, ensuring perfect browning and crispiness.



BN620-1

Enamelled tray suitable for 45 cm and 60 cm ovens. Depth 20 mm. Perfect for a wide range of savoury and sweet baking.



BNP608T

Teflon-coated tray, 8 mm depth, to be placed on the grid



GTP

Partially extractable telescopic guides (1 level), suitable for traditional ovens. Made in stainless steel, they guarantee stability and facilitate the smooth extraction of the trays.



KIT1CPF120X

Splashback, 120cm, stainless steel, suitable for Portofino cookers



KITP65CPF120

Depth extension kit (650mm), black, suitable for 120cm Portofino cookers



SCRP

Non-scratch hob scraper - suitable for induction and ceramic hobs

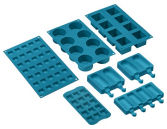

SMOLD

Set of 7 silicone moulds for ice creams, ice lollies, pralines, ice cubes or to portion food. Usable from -60°C to +230°C



BBQ

Double sided plate BBQ. Suitable for recreating succulent and crispy dishes in the oven with the typical taste of grilled cooking. The ribbed side is particularly suitable for meats and cheeses. The smooth side for fish, seafood and vegetables.



BN640

Enamelled tray suitable for 45cm and 60cm ovens. Depth 540 mm. Perfect for cooking and roasting meat and fish in sauces. Also ideal for experimenting with lighter and crunchy side dishes



GRILLPLATE

Universal griddle for induction, gas, ceramic and electric hobs. Non-stick surface ideal for cooking meat, cheese and vegetables. Dimensions: 410 x 240 mm.



GTT

Totally extractable telescopic guides (1 level), suitable for traditional ovens. Made in stainless steel, they guarantee stability and facilitate the smooth extraction of the trays.



KITH95CPF120

Height extension kit (950 mm), suitable for 120cm Portofino cookers (940-960mm)



PALPZ

Pizza shovel with folding handle. Dimensions L31.5 x H32.5 cm. Easy and convenient to use and store. Perfect for serving pizza, bread and savory pastries in a safe and professional way.



SFLK1

Child lock



TPKPLATE

Universal plate for induction, gas, ceramic and electric hobs. Non-stick surface ideal for cooking fish, eggs and vegetables. Dimensions: 410 X 240 mm.

WOKGHU



Cast iron WOK Support

Alternative products



CPF120IGMPX

Colour: Stainless Steel



CPF120IGMPR

Colour: Red



CPF120IGMPBL

Colour: Black



CPF120IGMPT

Colour: Turquese

Symbols glossary



Automatic merge of zones for a bigger area



Energy efficiency class A



Installation in column: Installation in column.



A DIRECT STEAM oven has 1 steam cooking function to which the user can MANUALLY add steam. The function is activated when the user turns the function.



Quadruple glazed: Number of glazed doors.



Ever Clean Enamel: Ever Clean enamel is applied electrostatically, corner to corner and edge to edge to prevent cracking or cracks over time. It is a particular pyrolytic enamel, resistant to acids which, in addition to being pleasantly bright, promotes greater cleaning of the oven walls, thanks to its lower porosity. It is baked at over 850 °C and slowly polymerized at a scientifically determined rate to ensure uniform depth and strength. Ever Clean enamel creates an impeccable finish both on the inside of the oven and on the trays, making the surfaces of the oven incredibly easy to maintain over time as it reduces the adhesion of fat during cooking.



Fan assisted: Intense and homogeneous traditional cooking, also suitable for complex recipes. The fan is active and the heat comes from below and from above at the same time. Ventilated cooking ensures a faster and more homogeneous result, leaving fragrant foods outside and moister inside. Ideal for baked pasta, biscuits, roasts and cobblers.



Circulaire: it is the perfect function for cooking all types of dishes in a more delicate way. The heat comes from the back of the oven and is distributed quickly and evenly. The fan is active. It is also ideal for cooking on multiple levels without mixing smells and flavors.



Heavy duty cast iron pan stands: for maximum stability and strength.



A+: Energy efficiency class A+ helps to save up to 10% energy compared to class A. Maximum performance with minimum consumption is guaranteed.



Air cooling system: to ensure a safe surface temperatures.



Triple glazed doors: Number of glazed doors.



ECO-logic: option allows you to restrict the power limit of the appliance real energy saving.



Fan assisted base: the mix of fan and lower heating element alone allows to finish cooking foods already cooked on the surface but not internally more quickly. This system is recommended to finish cooking foods that are already well cooked on the surface, but not internally, which therefore require a moderate higher heat. Ideal for any type of food.



Static: Traditional cooking suitable for the preparation of one dish at a time. The fan is not active and the heat comes from below and from above at the same time. Static cooking is slower and more delicate, ideal in order to get well cooked and dry dishes even inside. Ideal for cooking all types of roasts, fatty meats, bread, filled cakes.



ECO: low energy consumption cooking: this function is particularly suitable for cooking on a single shelf with low energy consumption. It is recommended for all types of food except those that can generate a lot of moisture (for example vegetables). To achieve maximum energy savings and reduce time, it is recommended to put the food in the oven without preheating the cooking compartment.

Grill: Very intense heat coming only from above from a double heating element. The fan is not active. Provides excellent grilling and gratinating results. Used at the end of cooking, it gives a uniform browning to dishes.

Half grill: For rapid cooking and browning of foods. Best results can be obtained by using the top shelf for small items, the lower shelves for larger ones, such as chops or sausages. For half grill heat is generated only at the centre of the element, so is ideal for smaller quantities.

Fan grill: very intense heat coming only from above from a double heating element. The fan is active. It allows the optimal grilling of thickest meats. Ideal for large cuts of meat.

Turbo: the heat comes from 3 directions: above, below and from the back of the oven. The fan is active. It allows quick cooking, even on several shelves without mixing the aromas. Ideal for large volumes or foods that require intense cooking.

Circulaire pulsed steam: Provides extra moisture to food during cooking. Excellent for bread baking. The moisture allows the bread dough to stretch further at the beginning of cooking, creating an aerated and light textured dough. The remaining part of the cooking process allows for the signature crust to form.

Overheat protection: The safety system that automatically turns off the hob in case of overheating of the control unit.

All glass inner door: All glass inner door, a single flat surface which is simple to keep clean.

The inner door glass: can be removed with a few quick movements for cleaning.

Side lights: Two opposing side lights increase visibility inside the oven.

Automatic opening: some models have Automatic opening door when the cycle is finished which is a perfect solution for handle-less kitchen units as no handle is needed. For safety reasons, the door locks automatically when the machine is in use to avoid it being opened inadvertently.

PYROLYSIS - AUTOMATIC CLEANING FUNCTION: the oven heats up to a temperature approaching 500 ° C and chars grease and food residues into a fine ash that can be easily wiped off with a damp cloth. At such a high temperature, the door locks automatically for safety, while the temperature of the door remains controlled so it is safe to touch User adjustable function based on the level of dirt present in the oven.

Indication of residual heat: After the glass ceramic hob is switched off the residual heat indicator shows which of the heating zones still remains hot. When the temperature drops below 60 ° C, the indicator goes out.

The oven cavity has 5 different cooking levels.

Soft close: all models are equipped with advanced function of smooth closing of the door, which allows the device to close smoothly and quietly.

Telescopic rails: allow you to pull out the dish and check it without having to remove it from the oven entirely.

Electronic control: Allows you to maintain temperature inside the oven with the precision 2-3 ° C. This enables to cook meals that are very sensitive to temperature changes, such as cakes, souffles, puddings.

Tilting grill: the tilting grill can be easily unhooked to move the heating element and clean the roof of the appliance in one simple step.

Ultra rapid burners: Powerful ultra rapid burners offer up to 5kw of power.

Vapor Clean: a simple cleaning function using steam to loosen deposits in the oven cavity.

The capacity indicates the amount of usable space in the oven cavity in litres.

Knobs control

The capacity indicates the amount of usable space in the oven cavity in litres.

4.3 inch display with LED technology, usability with knobs + 3 touch keys

Benefit (TT)

Pyrolysis

Easy oven cleaning thanks to special pyrolytic function

Touch control

Easy and intuitive timer setting with a single touch

Drawer storage compartment

More space thanks to the lower drawer compartment, ideal for storing accessories or cooking utensils

True-convection

The best cooking performances guaranteed by ventilated circular flow

Multiple fans and heating elements guarantee the perfect aerodynamic heat flow, allowing homogeneous and quicker cooking inside the cavity.

Multilevel cooking

Several cooking levels allow maximum flexibility of use

Multilevel halogen light

Internal halogen lighting on different levels guarantees excellent visibility

Removalble inner glass

Internal door glasses are easily removable for complete cleaning

Tangential cooling

New cooling system with tangential fan and airflow from the door to the splashback

Telescopic guides

Easy extraction and safe insertion of trays into the oven thanks to telescopic guides

Adjustable height

Cooker top flushed with the working area thanks to adjustable feet

Isothermic Cavity

The best cooking performance at the highest energy efficiency

AirFry (AIRFRY optional accessory)

Lighter and tastier food thanks to airfry basket (optional accessory)

Cold door

During any function, the external door glass is cold, avoiding any risk of burns

Pizza stone (optional accessory)

Baking with refractory stone for soft and crispy pizza and yeast products (STONE optional accessory)

BBQ (optional accessory)

Barbecue cooking directly in the oven with the double-sided grill (BBQ optional accessory)

Soft close

The door is equipped with a specific system for silent closing

Single turbine

The oven has a fan equipped with a circular heating element allowing cooking with rotating heat

Direct Steam

Steam is generated from water placed in a dedicated basin at the bottom of the cavity