CPF9GPOG

Cooker size	90x60 cm
N. of cavities with energy label	1
Cavity heat source	ELECTRICITY
Hob type	Gas
Type of main oven	Thermo-ventilated
Cleaning system main oven	Pyrolitic
EAN code	8017709229368
Energy efficiency class	A+



Aesthetics

Design	Flush fit	**Controls colour**	Stainless steel
Command panel finish	Enamelled metal	**No. of controls**	8
Aesthetic	Portofino	**Serigraphy colour**	Black
Logo	Assembled st/steel	**Display name**	CompactScreen
Colour	Olive green	**Door**	With frame
Logo position	Facia below the oven	**Glass type**	Grey
Upstand	Yes	**Handle**	Smeg Portofino
Hob colour	Stainless steel	**Handle Colour**	coloured
Type of pan stands	Cast Iron	**Storage compartment**	Push pull
Type of control setting hob	Control knobs	**Feet color**	Black
		Plinth	Black
Type of control knobs	Smeg Portofino		

Programs / Functions main oven

No. of cooking functions	10

Traditional cooking functions

- Static
- Fan assisted
- Circulaire
- Turbo
- Eco
- Small grill
- Large grill
- Fan grill (large)
- Base
- Fan assisted base

Other functions

- Defrost by time
- Defrost by weight
- Proving
- Sabbath

Cleaning functions

- Pyrolytic
- Pyrolytic eco

Automatic programs	20

Hob technical features

UR

Total no. of cook zones 6

Front left - Gas - 2UR (dual) - 4.20 kW
Rear left - Gas - AUX - 1.00 kW
Front centre - Gas - AUX - 1.00 kW
Rear centre - Gas - Semi Rapid - 1.80 kW
Front right - Gas - Semi Rapid - 1.80 kW
Rear right - Gas - Rapid - 3.00 kW

Type of gas burners	Standard	**Gas safety valves**	Yes
Automatic electronic ignition	Yes	**Burner caps**	Matt black enamelled

Main Oven Technical Features

No. of lights	2	**Total no. of door glasses**	4
Fan number	3	**No.of thermo-reflective door glasses**	3
Net volume of the cavity	115 l	**Safety Thermostat**	Yes
Gross volume, 1st cavity	129 l	**Heating suspended when door is opened**	Yes
Cavity material	Ever Clean enamel	**Cooling system**	Tangential
No. of shelves	5	**Door Lock During Pyrolisis**	Yes
Type of shelves	Metal racks		
Light type	Halogen		
Light Power	40 W		

Cooking time setting	Start and Stop
Light when oven door is open	Yes
Door opening	Flap down
Removable door	Yes
Full glass inner door	Yes
Removable inner door	Yes

Usable cavity space dimensions (HxWxD)	371x724x418 mm
Temperature control	Electronic
Lower heating element power	1700 W
Upper heating element - Power	1200 W
Grill element	1700 W
Large grill - Power	2900 W
Circular heating element - Power	2 x 1850 W
Grill type	Electric
Soft Close system	Yes

Options Main Oven

Timer	Yes
End of cooking acoustic alarm	Yes

Minimum Temperature	50 °C
Maximum temperature	260 °C

Accessories included for Main Oven & Hob



Rack with back and side stop	1
20mm deep tray	1
40mm deep tray	1

Grill mesh	1
Telescopic Guide rails, partial Extraction	1

Electrical Connection

Electrical connection rating	4000 W
Current	18 A
Voltage	220-240 V
Voltage 2 (V)	380-415 V
Electric cable	Installed, Single phase

Cable testing	Yes, Single phase
Additional connection modalities	Double and Three Phase
Frequency	50/60 Hz
Terminal block	5 poles
Plug	Not present

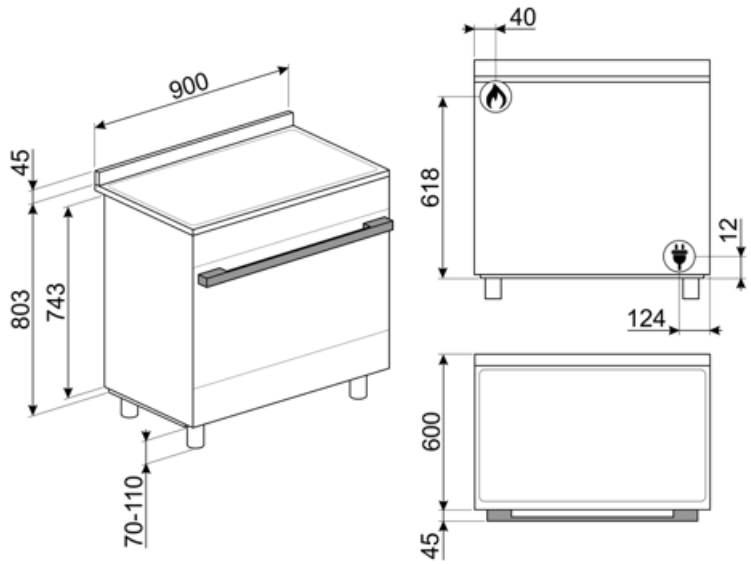
900
45
803
743
70-110
40
618
12
124
600
45

Compatible Accessories



AIRFRY9

Air fryer rack AIRFRY . Ideal for recreating traditional frying in the oven, but with fewer calories and less fat. It allows you to cook quickly and simply dishes such as French fries, fried vegetables and fish, ensuring perfect browning and crispiness.



BBQ9

teflon-coated aluminum grid for 90 cm cavity



BN920

Enamelled tray 90cm cavity, 20mm deep



BN940

Enamelled tray 90 cm, 40 mm deep



GTP

Partially extractable telescopic guides (1 level), suitable for traditional ovens. Made in stainless steel, they guarantee stability and facilitate the smooth extraction of the trays.



GTT

Totally extractable telescopic guides (1 level), suitable for traditional ovens. Made in stainless steel, they guarantee stability and facilitate the smooth extraction of the trays.



KIT600CPF9P

Cover strip for hob back side, suitable for 90 cm Portofino cookers with piro oven

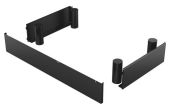

KITH95CPF9

Height extension kit with plinth, (950mm), three sides, black with feet, suitable for CPF9 Portofino and Sinfony C9 cookers



KITPBX

Height reduction feet (850mm), st/steel, for Sinfonia and Master cookers (845-856mm)

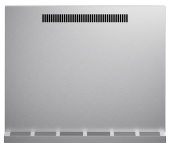

KITPC9X9

Splashback, 90 cm, for Sinfonia and Portofino pyrolytic cookers



KITPD

Heigh extension black feet (950 mm), black, suitable for Master, Sinfonia and Portofino 90cm (914-968mm); Heigh extension black feet (900 mm), black, suitable for Concerto cookers with 850mm height (880-935mm)



PALPZ

Pizza shovel with folding handle. Dimensions L31.5 x H32.5 cm. Easy and convenient to use and store. Perfect for serving pizza, bread and savory pastries in a safe and professional way.



SFLK1

Child lock

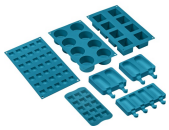

SMOLD

Set of 7 silicone moulds for ice creams, ice lollies, pralines, ice cubes or to portion food. Usable from -60°C to +230°C

Symbols glossary



Triple Fan Technology: The oven is equipped with an exclusive three fan system, which, combined with the increased power of the motors, enables excellent cooking performance. The two large side fans distribute the air around the outer perimeter of the cavity while the smaller central fan increases ventilation by creating a vertical vortex of heat. Accordingly, the temperature within the cavity is uniform, allowing food to be cooked evenly on all five levels, like in professional kitchens.



A+: Energy efficiency class A+ helps to save up to 10% energy compared to class A. Maximum performance with minimum consumption is guaranteed.



Heavy duty cast iron pan stands: for maximum stability and strength.



Installation in column: Installation in column.



Air cooling system: to ensure a safe surface temperatures.



Defrost by time: Manual defrost function. At the end of the set duration, the function stops.



Defrost by weight: Automatic defrost function. You choose the type of food to defrost from the available categories (MEAT - FISH - BREAD - DESSERTS). After entering the weight of the food, the oven automatically defines the time required for proper defrosting.



Quadruple glazed: Number of glazed doors.



Ever Clean Enamel: Ever Clean enamel is applied electrostatically, corner to corner and edge to edge to prevent cracking or cracks over time. It is a particular pyrolytic enamel, resistant to acids which, in addition to being pleasantly bright, promotes greater cleaning of the oven walls, thanks to its lower porosity. It is baked at over 850 °C and slowly polymerized at a scientifically determined rate to ensure uniform depth and strength. Ever Clean enamel creates an impeccable finish both on the inside of the oven and on the trays, making the surfaces of the oven incredibly easy to maintain over time as it reduces the adhesion of fat during cooking.



Fan assisted base: the mix of fan and lower heating element alone allows to finish cooking foods already cooked on the surface but not internally more quickly. This system is recommended to finish cooking foods that are already well cooked on the surface, but not internally, which therefore require a moderate higher heat. Ideal for any type of food.



Fan assisted: Intense and homogeneous traditional cooking, also suitable for complex recipes. The fan is active and the heat comes from below and from above at the same time. Ventilated cooking ensures a faster and more homogeneous result, leaving fragrant foods outside and moister inside. Ideal for baked pasta, biscuits, roasts and cobblers.



Static: Traditional cooking suitable for the preparation of one dish at a time. The fan is not active and the heat comes from below and from above at the same time. Static cooking is slower and more delicate, ideal in order to get well cooked and dry dishes even inside. Ideal for cooking all types of roasts, fatty meats, bread, filled cakes.



Base: the heat comes only from the bottom of the cavity. The fan is not active. Ideal for sweet and savory pies, cobblers and pizzas. Designed to complete cooking and make food more crunchy. This symbol in gas ovens indicates the gas burner.



Circulaire: it is the perfect function for cooking all types of dishes in a more delicate way. The heat comes from the back of the oven and is distributed quickly and evenly. The fan is active. It is also ideal for cooking on multiple levels without mixing smells and flavors.

ECO: low energy consumption cooking: this function is particularly suitable for cooking on a single shelf with low energy consumption. It is recommended for all types of food except those that can generate a lot of moisture (for example vegetables). To achieve maximum energy savings and reduce time, it is recommended to put the food in the oven without preheating the cooking compartment.

Half grill: For rapid cooking and browning of foods. Best results can be obtained by using the top shelf for small items, the lower shelves for larger ones, such as chops or sausages. For half grill heat is generated only at the centre of the element, so is ideal for smaller quantities.

Turbo: the heat comes from 3 directions: above, below and from the back of the oven. The fan is active. It allows quick cooking, even on several shelves without mixing the aromas. Ideal for large volumes or foods that require intense cooking.

The inner door glass: can be removed with a few quick movements for cleaning.

Automatic opening: some models have Automatic opening door when the cycle is finished which is a perfect solution for handle-less kitchen units as no handle is needed. For safety reasons, the door locks automatically when the machine is in use to avoid it being opened inadvertently.

Pyrolitic: The Eco pyrolitic cleaning function can be selected when the oven has a lighter build up of dirt. This function has a maximum duration of 1.5 hours.

SABBATH: function that allows to cook food respecting Judaism's day of rest provisions.

Soft close: all models are equipped with advanced function of smooth closing of the door, which allows the device to close smoothly and quietly.

Electronic control: Allows you to maintain temperature inside the oven with the precision 2-3 ° C. This enables to cook meals that are very sensitive to temperature changes, such as cakes, souffles, puddings.

Grill: Very intense heat coming only from above from a double heating element. The fan is not active. Provides excellent grilling and gratinating results. Used at the end of cooking, it gives a uniform browning to dishes.

Fan grill: very intense heat coming only from above from a double heating element. The fan is active. It allows the optimal grilling of thickest meats. Ideal for large cuts of meat.

All glass inner door: All glass inner door, a single flat surface which is simple to keep clean.

Side lights: Two opposing side lights increase visibility inside the oven.

PYROLYSIS - AUTOMATIC CLEANING FUNCTION: the oven heats up to a temperature approaching 500 ° C and chars grease and food residues into a fine ash that can be easily wiped off with a damp cloth. At such a high temperature, the door locks automatically for safety, while the temperature of the door remains controlled so it is safe to touch User adjustable function based on the level of dirt present in the oven.

Air at 40°C provides the perfect environment for proving yeast type dough mixes. Simply select the function and place dough in the cavity for allotted

The oven cavity has 5 different cooking levels.

Telescopic rails: allow you to pull out the dish and check it without having to remove it from the oven entirely.

Ultra rapid burners: Powerful ultra rapid burners offer up to 5kw of power.



The capacity indicates the amount of usable space in the oven cavity in litres.



With a simple and intuitive interface, the COMPACTscreen provides a pleasant user experience, thanks to the interaction with the knobs.



Knobs control