CPF9IPAN

Cooker size	90x60 cm
N. of cavities with energy label	1
Cavity heat source	Electric
Hob type	Induction
Type of main oven	Thermo-ventilated
Cleaning system main oven	Pyrolytic
EAN code	8017709240721
Energy efficiency class	A+

Aesthetics

Aesthetics	Portofino	**No. of controls**	7
Colour	Anthracite	**Serigraphy colour**	Silver
Design	Flush fit	**Handle**	Smeg Portofino
Door	With frame	**Handle Colour**	coloured
Upstand	Yes	**Glass type**	Grey
Hob colour	Stainless steel	**Feet**	Black
Command panel finish	Enamelled metal	**Plinth**	Black
Control knobs	Smeg Portofino	**Storage compartment**	Push pull
Controls colour	Stainless steel	**Logo**	Assembled st/steel
Display	LCD	**Logo position**	Facia below the oven

Programs / Functions

No. of cooking functions	10

Traditional cooking functions

Static

Fan assisted

Circulaire

Turbo (circulaire + bottom + upper + fan)

ECO

Small grill

Large grill

Fan grill (large)

Base

Fan assisted base

Cleaning functions

Pyrolytic

Pyrolytic eco

Automatic programs 20

Other functions

Defrost by time

Defrost by weight

Proving

Sabbath

Hob technical features

Total no. of cook zones 5

Front left - Induction - single - 1.40 kW - Booster 2.20 kW - Ø 14.5 cm
Rear left - Induction - single - 1.85 kW - Booster 3.00 kW - Ø 18.0 cm
Central - Induction - single - 2.60 kW - Booster 3.70 kW - Ø 27.0 cm
Rear right - Induction - single - 2.30 kW - Booster 3.70 kW - Ø 21.0 cm
Front right - Induction - single - 1.40 kW - Booster 2.20 kW - Ø 14.5 cm

Automatic switch off when overheat	Yes	**Selected zone indicator**	Yes
		Residual heat indicator	Yes
Automatic pan detection	Yes		
Minimum pan diameter indication	Yes		

Main Oven Technical Features

No. of lights	2	**Total no. of door glasses**	4
Fan number	3	**No.of thermo-reflective door glasses**	3
Net volume of the cavity	115 litres		
Gross volume, 1st cavity	129 l	**Safety Thermostat**	Yes
Cavity material	Easy clean enamel		

Shelf positions	5
Type of shelves	Metal racks
Light type	Halogen
Light power	40 W
Cooking time setting	Start and Stop
Light when oven door is open	Yes
Door opening	Flap down
Removable door	Yes
Full glass inner door	Yes
Removable inner door	Yes
Heating suspended when door is opened	Yes
Cooling system	Tangential
Door Lock During Pyrolisis	Yes
Usable cavity space dimensions (HxWxD)	371x724x418 mm
Temperature control	Electronic
Lower heating element power	1700 W
Upper heating element - Power	1200 W
Grill elememt	1700 W
Large grill - Power	2900 W
Circular heating element - Power	2 x 1850 W
Grill type	Electric
Soft Close system	Yes

Options Main Oven

Timer	Yes
End of cooking acoustic alarm	Yes
Minimum Temperature	50 °C
Maximum temperature	260 °C

Accessories included for Main Oven & Hob

Rack with back and side stop	1
20mm deep tray	1
40mm deep tray	1
Grill mesh	1
Telescopic Guide rails, partial Extraction	1

Electrical Connection

Max Power Draw	11400 W
Current	50 A
Voltage	220-240 V
Voltage 2 (V)	380-415 V
Type of electric cable installed	Yes, Single phase
Type of electric cable	Yes, Double and Three Phase
Frequency	50/60 Hz
Terminal block	5 poles

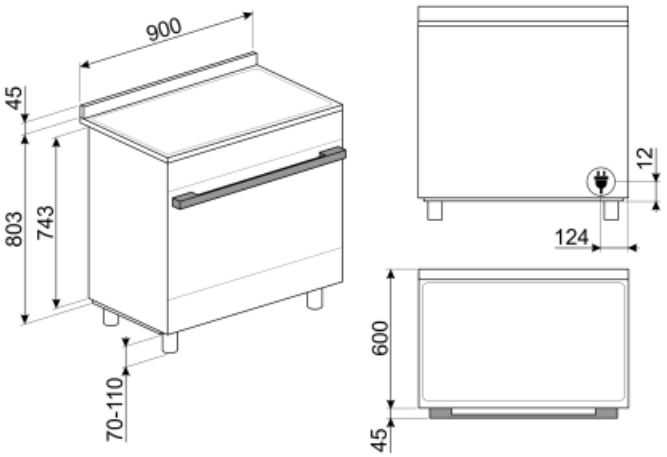
900
45
803
743
70-110
12
124
600
45

Not included accessories

AIRFRY9

Air fryer rack AIRFRY . Ideal for recreating traditional frying in the oven, but with fewer calories and less fat. It allows you to cook quickly and simply dishes such as French fries, fried vegetables and fish, ensuring perfect browning and crispiness.

SFLK1

Child lock

PRTX

Refractary pizza stone with handles. D=35cm Not suitable for microwave ovens. Suitable for gas ovens, to be put on the griddle.

PPR9

Refractary pizza stone without handles. Squared shaped stone: L64xH2,3xP37,5 cm Suitable also for gas ovens, to be put on the griddle.

KITPBX

Height reduction feet (850 mm)

SCRP

Induction and ceramic hobs and teppanyaki scraper

TPKPLATE

Universal plate for induction, gas, ceramic and electric hobs. Non-stick surface ideal for cooking fish, eggs and vegetables. Dimensions: 410 X 240 mm.

GTT

Totally extractable telescopic guides (1 level) Extraction: 433 mm Material: Stainless steel AISI 430 polished

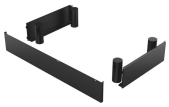

KITH95CPF9

Height extension kit (950 mm), suitable for Portofino cookers

GTP

Partially extractable telescopic guides (1 level) Extraction: 300 mm Material: Stainless steel AISI 430 polished

GRILLPLATE

Universal griddle for induction, gas, ceramic and electric hobs. Non-stick surface ideal for cooking meat, cheese and vegetables. Dimensions: 410 x 240 mm.

KIT600CPF9P

Cover strip for hob back side, suitable for 90 cm Portofino cookers with piro oven

BBQ9

KITPD

Heigh extension black feet (950 mm) for cookers

PALPZ

Pizza shovel with fold away handle width: 315mm length : 325mm

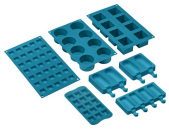

SMOLD

Set of 7 silicone moulds for ice creams, ice lollies, pralines, ice cubes or to portion food. Usable from -60°C to +230°C

Symbols glossary

Air cooling system: to ensure a safe surface temperatures.

Defrost by weight: With this function the defrosting time is determined

A+: Energy efficiency class A+ helps to save up to 10% energy compared to class A. Maximum performance with minimum consumption is guaranteed.

Circogas: In gas ovens the fan distributes the heat quickly and evenly throughout the oven cavity, avoiding flavour transfer when cooking a number of different dishes at the same time. In electric ovens this combination completes cooking more quickly of foods that are ready on the surface, but that require more cooking inside, without further browning.

Upper and lower element only: a traditional cooking method best suited for single items located in the centre of the oven. the top pf the oven will always be hottest. Ideal for roast, fruit cakes, bread etc.

Circulaire: The combination of the fan and circular element around it gives a hot air cooking method. This provides many benefits including no preheat if cook time is more than 20 minutes, no flavour transfer when cooking different foods at the same time, less energy, and shorter cook times. Good for all types of food.

Grill element: Using of grill gives excellent results when cooking meat of medium and small portions, especially when combined with a rotisserie (where possible). Also ideal for cooking sausages and bacon.

Fan with grill element: The fan reduces the fierce heat from the grill, providing an excellent method of grilling various foods, chops, steaks, sausages etc. giving even browning and heat distribution, without drying out the food. The top two levels recommended for use, and the lower part of the oven can be used to keep items warm at the same time, an excellent facility when cooking a grilled breakfast. Half grill (centre portion only) is ideal for small quantities of food.

Overheat protection: The safety system that automatically turns off the hob in case of overheating of the control unit.

Defrost by time: with this function the time of thawing of foods are determined automatically.

Quadruple glazed: Number of glazed doors.

Enamel interior: The enamel interior of all Smeg ovens have a special antacid lining which helps keep the interior clean by reducing the amount of cooking grease adhering to it.

Fan with upper and lower elements: The elements combined with the fan aim to provide more uniform heat, a similar method to conventional cooking, so pre-heat is required. Most suitable for items requiring slow cooking methods.

Lower heating element only: This function is ideal for foods that require extra base temperature without browning, e.g. pastry dishes, pizza. Also suitable for slow cooking of stews and casseroles.

ECO: The combination of the grill, fan and lower element is particularly suitable for cooking small quantities of food.

Half grill: For rapid cooking and browning of foods. Best results can be obtained by using the top shelf for small items, the lower shelves for larger ones, such as chops or sausages. For half grill heat is generated only at the centre of the element, so is ideal for smaller quantities.

Circulaire with upper and lower elements: The use of the fan with both elements allows food to be cooked quickly and effectively, ideal for large joints that require thorough cooking. It offers a similar result to rotisserie, moving the heat around the food, instead of moving the food itself, enabling any size or shape to be cooked.

Induction: The work of these hobs is based on the principle of electromagnetic induction. The heat is generated directly in the bottom of the pan during its contact with the hob.

All glass inner door: All glass inner door, a single flat surface which is simple to keep clean.

Side lights: Two opposing side lights increase visibility inside the oven.

Pyrolitic: The Eco pyrolitic cleaning function can be selected when the oven has a lighter build up of dirt. This function has a maximum duration of 1.5 hours.

Indication of residual heat: After the glass ceramic hob is switched off the residual heat indicator shows which of the heating zones still remains hot. When the temperature drops below 60 ° C, the indicator goes out.

The oven cavity has 5 different cooking levels.

Telescopic rails: allow you to pull out the dish and check it without having to remove it from the oven entirely.

The capacity indicates the amount of usable space in the oven cavity in litres.

The inner door glass: can be removed with a few quick movements for cleaning.

Pyrolitic: Pyrolitic cleaning cycles can be selected as necessary to automatically clean the oven interior.

Air at 40°C provides the perfect environment for proving yeast type dough mixes. Simply select the function and place dough in the cavity for allotted

Sabbath: This function allows you to cook food whilst respecting the provisions of the Jewish day of rest.

Soft close: all models are equipped with advanced function of smooth closing of the door, which allows the device to close smoothly and quietly.

Electronic control: Allows you to maintain temperature inside the oven with the precision 2-3 ° C. This enables to cook meals that are very sensitive to temperature changes, such as cakes, souffles, puddings.