CPF9IPOG

Cooker size	90x60 cm
N. of cavities with energy label	1
Cavity heat source	ELECTRICITY
Hob type	Induction
Type of main oven	Thermoseal
Cleaning system main oven	Pyrolitic
EAN code	8017709240745
Energy efficiency class	A+



Aesthetics

Design	Flush fit	**No. of controls**	7
Command panel finish	Enamelled metal	**Serigraphy colour**	Black
Aesthetic	Portofino	**Display**	TFT
Logo	Assembled st/steel	**Door**	With frame
Colour	Olive green	**Glass type**	Grey
Logo position	Facia below the oven	**Handle**	Smeg Portofino
Upstand	Yes	**Handle Colour**	coloured
Hob colour	Stainless steel	**Storage compartment**	Push pull
Type of control setting	Control knobs	**Feet**	Black
Control knobs	Smeg Portofino	**Plinth**	Black
Controls colour	Stainless steel		

Programs / Functions

No. of cooking functions	10

Traditional cooking functions

- Static
- Fan assisted
- Circulaire
- Turbo
- Eco
- Small grill
- Large grill
- Fan grill (large)
- Base
- Fan assisted bottom

Other functions

- Defrost by time
- Defrost by weight
- Proving
- Sabbath

Cleaning functions

- Pyrolytic
- Pyrolytic eco

Automatic programs	20

Hob technical features

Total no. of cook zones 5

Front left - Induction - single - 1.40 kW - Booster 2.20 kW - Ø 14.5 cm
Rear left - Induction - single - 1.85 kW - Booster 3.00 kW - Ø 18.0 cm
Central - Induction - single - 2.60 kW - Booster 3.70 kW - Ø 27.0 cm
Rear right - Induction - single - 2.30 kW - Booster 3.70 kW - Ø 21.0 cm
Front right - Induction - single - 1.40 kW - Booster 2.20 kW - Ø 14.5 cm

Automatic switch off when overheat	Yes	**Selected zone indicator**	Yes
		Residual heat indicator	Yes
Automatic pan detection	Yes		
Minimum pan diameter indication	Yes		

Main Oven Technical Features

No. of lights	2	**Total no. of door glasses**	4
Fan number	3	**No.of thermo-reflective door glasses**	3
Net volume of the cavity	115 l		
Gross volume, 1st cavity	129 l	**Safety Thermostat**	Yes
Cavity material	Ever Clean enamel	**Heating suspended when door is opened**	Yes
No. of shelves	5		
Type of shelves	Metal racks	**Cooling system**	Tangential

Light type	Halogen
Light Power	40 W
Cooking time setting	Start and Stop
Light when oven door is open	Yes
Door opening	Flap down
Removable door	Yes
Full glass inner door	Yes
Removable inner door	Yes
Door Lock During Pyrolisis	Yes
Usable cavity space dimensions (HxWxD)	371x724x418 mm
Temperature control	Electronic
Lower heating element power	1700 W
Upper heating element - Power	1200 W
Grill elememt	1700 W
Large grill - Power	2900 W
Circular heating element - Power	2 x 1850 W
Grill type	Electric
Soft Close system	Yes

Options Main Oven

Timer	Yes
End of cooking acoustic alarm	Yes
Minimum Temperature	50 °C
Maximum temperature	260 °C

Accessories included for Main Oven & Hob



Rack with back and side stop	1
20mm deep tray	1
40mm deep tray	1
Grill mesh	1
Telescopic Guide rails, partial Extraction	1

Electrical Connection

Electrical connection rating	11400 W
Current	50 A
Voltage	220-240 V
Voltage 2 (V)	380-415 V
Type of electric cable installed	Yes, Single phase
Type of electric cable	Yes, Double and Three Phase
Frequency	50/60 Hz
Terminal block	5 poles
Plug	No

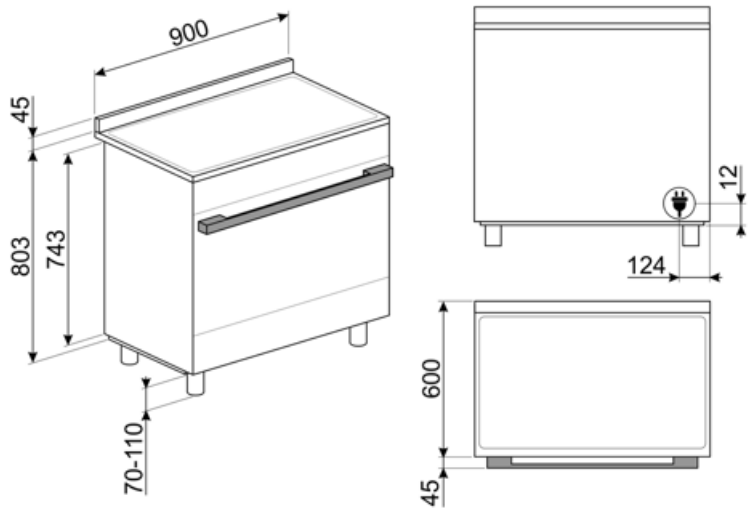
900
45
803
743
70-110
12
124
600
45

Compatible Accessories



AIRFRY9

Air fryer rack AIRFRY . Ideal for recreating traditional frying in the oven, but with fewer calories and less fat. It allows you to cook quickly and simply dishes such as French fries, fried vegetables and fish, ensuring perfect browning and crispiness.



BBQ9

teflon-coated aluminum grid for 90 cm cavity



BN920

Enamelled tray 90cm cavity, 20mm deep



BN940

Enamelled tray 90 cm, 40 mm deep



GRILLPLATE

Universal griddle for induction, gas, ceramic and electric hobs. Non-stick surface ideal for cooking meat, cheese and vegetables. Dimensions: 410 x 240 mm.



GTP

Partially extractable telescopic guides (1 level) Extraction: 300 mm Material: Stainless steel AISI 430 polished



GTT

Totally extractable telescopic guides (1 level) Extraction: 433 mm Material: Stainless steel AISI 430 polished



KIT600CPF9P

Cover strip for hob back side, suitable for 90 cm Portofino cookers with piro oven



KITH95CPF9

Height extension kit (950 mm), suitable for Portofino cookers



KITPBX

Height reduction feet (850 mm)



KITPC9X9

Splashback, 90 cm, for Sinfonia and Portofino pyrolytic cookers



KITPD

Heigh extension black feet (950 mm) for cookers



PALPZ

Pizza shovel with fold away handle width: 315mm length : 325mm



SCRP

Induction and ceramic hobs and teppanyaki scraper



SFLK1

Child lock

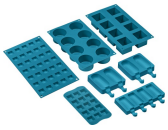

SMOLD

Set of 7 silicone moulds for ice creams, ice lollies, pralines, ice cubes or to portion food. Usable from -60°C to +230°C

TPKPLATE



Universal plate for induction, gas, ceramic and electric hobs. Non-stick surface ideal for cooking fish, eggs and vegetables. Dimensions: 410 X 240 mm.

Symbols glossary



Triple Fan Technology: The oven is equipped with an exclusive three fan system, which, combined with the increased power of the motors, enables excellent cooking performance. The two large side fans distribute the air around the outer perimeter of the cavity while the smaller central fan increases ventilation by creating a vertical vortex of heat. Accordingly, the temperature within the cavity is uniform, allowing food to be cooked evenly on all five levels, like in professional kitchens.



A+: Energy efficiency class A+ helps to save up to 10% energy compared to class A. Maximum performance with minimum consumption is guaranteed.



Installation in column: Installation in column



Knobs control



Air cooling system: to ensure a safe surface temperatures.



Defrost by time: with this function the time of thawing of foods are determined automatically.



Defrost by weight: With this function the defrosting time is determined



...



Quadruple glazed: Number of glazed doors.



Enamel interior: The enamel interior of all Smeg ovens have a special antacid lining which helps keep the interior clean by reducing the amount of cooking grease adhering to it.



Fan assisted base: the mix of fan and lower heating element alone allows to finish cooking foods already cooked on the surface but not internally more quickly. This system is recommended to finish cooking foods that are already well cooked on the surface, but not internally, which therefore require a moderate higher heat. Ideal for any type of food.



Fan with upper and lower elements: The elements combined with the fan aim to provide more uniform heat, a similar method to conventional cooking, so pre-heat is required. Most suitable for items requiring slow cooking methods.



Upper and lower element only: a traditional cooking method best suited for single items located in the centre of the oven. the top pf the oven will always be hottest. Ideal for roast, fruit cakes, bread etc.



Lower heating element only: This function is ideal for foods that require extra base temperature without browning, e.g. pastry dishes, pizza. Also suitable for slow cooking of stews and casseroles.



Circulaire: The combination of the fan and circular element around it gives a hot air cooking method. This provides many benefits including no preheat if cook time is more than 20 minutes, no flavour transfer when cooking different foods at the same time, less energy, and shorter cook times. Good for all types of food.



ECO: The combination of the grill, fan and lower element is particularly suitable for cooking small quantities of food.



Grill element: Using of grill gives excellent results when cooking meat of medium and small portions, especially when combined with a rotisserie (where possible). Also ideal for cooking sausages and bacon.



Half grill: For rapid cooking and browning of foods. Best results can be obtained by using the top shelf for small items, the lower shelves for larger ones, such as chops or sausages. For half grill heat is generated only at the centre of the element, so is ideal for smaller quantities.

Fan with grill element: The fan reduces the fierce heat from the grill, providing an excellent method of grilling various foods, chops, steaks, sausages etc. giving even browning and heat distribution, without drying out the food. The top two levels recommended for use, and the lower part of the oven can be used to keep items warm at the same time, an excellent facility when cooking a grilled breakfast. Half grill (centre portion only) is ideal for small quantities of food.

Circulaire with upper and lower elements: The use of the fan with both elements allows food to be cooked quickly and effectively, ideal for large joints that require thorough cooking. It offers a similar result to rotisserie, moving the heat around the food, instead of moving the food itself, enabling any size or shape to be cooked.

Overheat protection: The safety system that automatically turns off the hob in case of overheating of the control unit.

Induction: The work of these hobs is based on the principle of electromagnetic induction. The heat is generated directly in the bottom of the pan during its contact with the hob.

All glass inner door: All glass inner door, a single flat surface which is simple to keep clean.

The inner door glass: can be removed with a few quick movements for cleaning.

Side lights: Two opposing side lights increase visibility inside the oven.

Automatic opening: some models have Automatic opening door when the cycle is finished which is a perfect solution for handle-less kitchen units as no handle is needed. For safety reasons, the door locks automatically when the machine is in use to avoid it being opened inadvertently.

Pyrolitic: Pyrolitic cleaning cycles can be selected as necessary to automatically clean the oven interior.

Pyrolitic: The Eco pyrolitic cleaning function can be selected when the oven has a lighter build up of dirt. This function has a maximum duration of 1.5 hours.

Air at 40°C provides the perfect environment for proving yeast type dough mixes. Simply select the function and place dough in the cavity for allotted

Indication of residual heat: After the glass ceramic hob is switched off the residual heat indicator shows which of the heating zones still remains hot. When the temperature drops below 60 ° C, the indicator goes out.

Sabbath: This function allows you to cook food during the Sabbath, the Holiday of rest in the Jewish religion, respecting the precepts. The oven works

The oven cavity has 5 different cooking levels.

Soft close: all models are equipped with advanced function of smooth closing of the door, which allows the device to close smoothly and quietly.

Telescopic rails: allow you to pull out the dish and check it without having to remove it from the oven entirely.

Electronic control: Allows you to maintain temperature inside the oven with the precision 2-3 ° C. This enables to cook meals that are very sensitive to temperature changes, such as cakes, souffles, puddings.

The capacity indicates the amount of usable space in the oven cavity in litres.