CPF9IPOR

Cooker size	90x60 cm
N. of cavities with energy label	1
Cavity heat source	ELECTRICITY
Hob type	Induction
Type of main oven	Thermo-ventilated
Cleaning system main oven	Pyrolitic
EAN code	8017709240752
Energy efficiency class	A+

Aesthetics

Aesthetic	Portofino	**No. of controls**	7
Colour	Orange	**Serigraphy colour**	Black
Design	Flush fit	**Handle**	Smeg Portofino
Door	With frame	**Handle Colour**	coloured
Upstand	Yes	**Glass type**	Grey
Hob colour	Stainless steel	**Feet**	Black
Command panel finish	Enamelled metal	**Plinth**	Black
Control knobs	Smeg Portofino	**Storage compartment**	Push pull
Controls colour	Stainless steel	**Logo**	Assembled st/steel
Display	LCD	**Logo position**	Facia below the oven

Programme / Functions

No. of cooking functions 10

Traditional cooking functions

- Static
- Fan assisted
- Circulaire
- Turbo
- Eco
- Small grill
- Large grill
- Fan grill (large)
- Base
- Fan assisted bottom

Cleaning functions

Pyrolytic

Pyrolytic eco

Automatic programs 20

Other functions

Defrost by time

Defrost by weight

Proving

Sabbath

Hob technical features

Total no. of cook zones 5

Front left - Induction - single - 1.40 kW - Booster 2.20 kW - Ø 14.5 cm

Rear left - Induction - single - 1.85 kW - Booster 3.00 kW - Ø 18.0 cm

Central - Induction - single - 2.60 kW - Booster 3.70 kW - Ø 27.0 cm

Rear right - Induction - single - 2.30 kW - Booster 3.70 kW - Ø 21.0 cm

Front right - Induction - single - 1.40 kW - Booster 2.20 kW - Ø 14.5 cm

Automatic switch off when overheat	Yes	**Selected zone indicator**	Yes
		Residual heat indicator	Yes
Automatic pan detection	Yes		
Minimum pan diameter indication	Yes		

Main Oven Technical Features

No. of lights	2	**Total no. of door glasses**	4
Fan number	3	**No.of thermo-reflective door glasses**	3
Net volume of the cavity	115 l	**Safety Thermostat**	Yes
Gross volume, 1st cavity	129 l	**Heating suspended when door is opened**	Yes
Cavity material	Ever Clean enamel	**Cooling system**	Tangential
No. of shelves	5	**Door Lock During Pyrolisis**	Yes
Type of shelves	Metal racks	**Usable cavity space dimensions (HxWxD)**	371x724x418 mm
Light type	Halogen	**Temperature control**	Electronic
Light Power	40 W	**Lower heating element power**	1700 W
Cooking time setting	Start and Stop	**Upper heating element - Power**	1200 W
Light when oven door is open	Yes	**Grill elememt**	1700 W
Door opening	Flap down	**Large grill - Power**	2900 W
Removable door	Yes	**Circular heating element - Power**	2 x 1850 W
Full glass inner door	Yes		
Removable inner door	Yes		

Grill type	Electric
Soft Close system	Yes

Options Main Oven

Timer	Yes	**Minimum Temperature**	50 °C
End of cooking acoustic alarm	Yes	**Maximum temperature**	260 °C

Accessories included for Main Oven & Hob

Rack with back and side stop	1	**Grill mesh**	1
20mm deep tray	1	**Telescopic Guide rails, partial Extraction**	1
40mm deep tray	1		

Electrical Connection

Electrical connection rating	11400 W	**Type of electric cable installed**	Yes, Single phase
Current	50 A	**Additional connection modalities**	Yes, Double and Three Phase
Voltage	220-240 V	**Frequency**	50/60 Hz
Voltage 2 (V)	380-415 V	**Terminal block**	5 poles

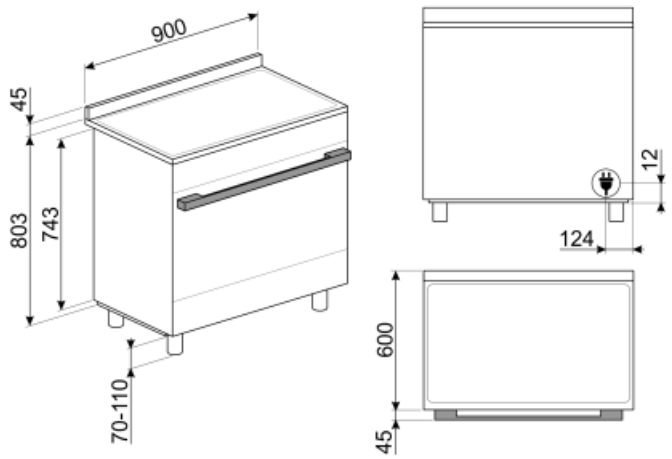

Not included accessories

AIRFRY9

Air fryer rack AIRFRY . Ideal for recreating traditional frying in the oven, but with fewer calories and less fat. It allows you to cook quickly and simply dishes such as French fries, fried vegetables and fish, ensuring perfect browning and crispiness.

SFLK1

Child lock

PRTX

Refractary pizza stone with handles. D=35cm Not suitable for microwave ovens. Suitable for gas ovens, to be put on the griddle.

PPR9

Refractary pizza stone without handles. Squared shaped stone: L64xH2,3xP37,5 cm Suitable also for gas ovens, to be put on the griddle.

KITPBX

Height reduction feet (850mm), st/steel, for Sinfonia and Master cookers (845-856mm)

SCRP

Non-scratch hob scraper - suitable for induction and ceramic hobs

TPKPLATE

Universal plate for induction, gas, ceramic and electric hobs. Non-stick surface ideal for cooking fish, eggs and vegetables. Dimensions: 410 X 240 mm.

GTT

Totally extractable telescopic guides (1 level), suitable for traditional ovens. Made in stainless steel, they guarantee stability and facilitate the smooth extraction of the trays.

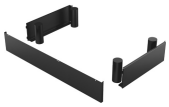

KITH95CPF9

Height extension kit with plinth, (950mm), three sides, black with feet, suitable for CPF9 Portofino and Sinfony C9 cookers

GTP

Partially extractable telescopic guides (1 level), suitable for traditional ovens. Made in stainless steel, they guarantee stability and facilitate the smooth extraction of the trays.

GRILLPLATE

Universal griddle for induction, gas, ceramic and electric hobs. Non-stick surface ideal for cooking meat, cheese and vegetables. Dimensions: 410 x 240 mm.

KIT600CPF9P

Cover strip for hob back side, suitable for 90 cm Portofino cookers with piro oven

BBQ9

KITPD

Heigh extension black feet (950 mm), black, suitable for Master, Sinfonia and Portofino 90cm (914-968mm); Heigh extension black feet (900 mm), black, suitable for Concerto cookers with 850mm height (880-935mm)

PALPZ

Pizza shovel with folding handle. Dimensions L31.5 x H32.5 cm. Easy and convenient to use and store. Perfect for serving pizza, bread and savory pastries in a safe and professional way.

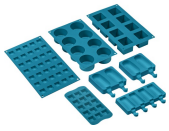

SMOLD

Set of 7 silicone moulds for ice creams, ice lollies, pralines, ice cubes or to portion food. Usable from -60°C to +230°C

Symbols glossary (TT)

Air cooling system: to ensure a safe surface temperatures.

A+: Energy efficiency class A+ helps to save up to 10% energy compared to class A. Maximum performance with minimum consumption is guaranteed.

Quadruple glazed: Number of glazed doors.

Fan assisted base: the mix of fan and lower heating element alone allows to finish cooking foods already cooked on the surface but not internally more quickly. This system is recommended to finish cooking foods that are already well cooked on the surface, but not internally, which therefore require a moderate higher heat. Ideal for any type of food.

Static: Traditional cooking suitable for the preparation of one dish at a time. The fan is not active and the heat comes from below and from above at the same time. Static cooking is slower and more delicate, ideal in order to get well cooked and dry dishes even inside. Ideal for cooking all types of roasts, fatty meats, bread, filled cakes.

Circulaire: it is the perfect function for cooking all types of dishes in a more delicate way. The heat comes from the back of the oven and is distributed quickly and evenly The fan is active. It is also ideal for cooking on multiple levels without mixing smells and flavors.

Defrost by time: Manual defrost function. At the end of the set duration, the function stops.

Defrost by weight: Automatic defrost function. You choose the type of food to defrost from the available categories (MEAT - FISH - BREAD - DESSERTS) After entering the weight of the food, the oven automatically defines the time required for proper defrosting.

Ever Clean Enamel: Ever Clean enamel is applied electrostatically, corner to corner and edge to edge to prevent cracking or cracks over time. It is a particular pyrolytic enamel, resistant to acids which, in addition to being pleasantly bright, promotes greater cleaning of the oven walls, thanks to its lower porosity. It is baked at over 850 ° C and slowly polymerized at a scientifically determined rate to ensure uniform depth and strength Ever Clean enamel creates an impeccable finish both on the inside of the oven and on the trays, making the surfaces of the oven incredibly easy to maintain over time as it reduces the adhesion of fat during cooking

Fan assisted: Intense and homogeneous traditional cooking, also suitable for complex recipes. The fan is active and the heat comes from below and from above at the same time. Ventilated cooking ensures a faster and more homogeneous result, leaving fragrant foods outside and moister inside. Ideal for baked pasta, biscuits, roasts and cobblers.

Base: the heat comes only from the bottom of the cavity. The fan is not active. Ideal for sweet and savory pies, cobblers and pizzas. Designed to complete cooking and make food more crunchy This symbol in gas ovens indicates the gas burner.

ECO: low energy consumption cooking: this function is particularly suitable for cooking on a single shelf with low energy consumption. It is recommended for all types of food except those that can generate a lot of moisture (for example vegetables). To achieve maximum energy savings and reduce time, it is recommended to put the food in the oven without preheating the cooking compartment

Grill: Very intense heat coming only from above from a double heating element. The fan is not active. Provides excellent grilling and gratinating results. Used at the end of cooking, it gives a uniform browning to dishes.

Half grill: For rapid cooking and browning of foods. Best results can be obtained by using the top shelf for small items, the lower shelves for larger ones, such as chops or sausages. For half grill heat is generated only at the centre of the element, so is ideal for smaller quantities.

Fan grill: very intense heat coming only from above from a double heating element The fan is active. It allows the optimal grilling of thickest meats. Ideal for large cuts of meat.

Turbo: the heat comes from 3 directions: above, below and from the back of the oven The fan is active. It allows quick cooking, even on several shelves without mixing the aromas. Ideal for large volumes or foods that require intense cooking.

Overheat protection: The safety system that automatically turns off the hob in case of overheating of the control unit.

Induction: The work of these hobs is based on the principle of electromagnetic induction. The heat is generated directly in the bottom of the pan during its contact with the hob.

All glass inner door: All glass inner door, a single flat surface which is simple to keep clean.

The inner door glass: can be removed with a few quick movements for cleaning.

Side lights: Two opposing side lights increase visibility inside the oven.

PYROLYSIS - AUTOMATIC CLEANING FUNCTION: the oven heats up to a temperature approaching 500 ° C and chars grease and food residues into a fine ash that can be easily wiped off with a damp cloth. At such a high temperature, the door locks automatically for safety, while the temperature of the door remains controlled so it is safe to touch User adjustable function based on the level of dirt present in the oven.

Pyrolitic: The Eco pyrolitic cleaning function can be selected when the oven has a lighter build up of dirt. This function has a maximum duration of 1.5 hours.

Air at 40°C provides the perfect environment for proving yeast type dough mixes. Simply select the function and place dough in the cavity for allotted

Indication of residual heat: After the glass ceramic hob is switched off the residual heat indicator shows which of the heating zones still remains hot. When the temperature drops below 60 ° C, the indicator goes out.

SABBATH: function that allows to cook food respecting Judaism's day of rest provisions.

The oven cavity has 5 different cooking levels.

Soft close: all models are equipped with advanced function of smooth closing of the door, which allows the device to close smoothly and quietly.

Telescopic rails: allow you to pull out the dish and check it without having to remove it from the oven entirely.

Electronic control: Allows you to maintain temperature inside the oven with the precision 2-3 ° C. This enables to cook meals that are very sensitive to temperature changes, such as cakes, souffles, puddings.

The capacity indicates the amount of usable space in the oven cavity in litres.