CPR915N

Product Family	Drawer
Commercial height	15 cm
Type	Reheat

Aesthetics

Aesthetic	Victoria	**Material**	Painted material
Colour	Black	**Logo**	Silk screen
Finishing	Glossy black	**Logo position**	Inside

Controls

Type of control setting	Control knobs	**Control knobs**	Standard
Type of temperature control	Electro-mechanic	**Controls colour**	Steel effect
No. of controls	1		

Programme / Functions

Defrost	Yes
Proofing	Yes
Mug warmer	Yes
Keep warm	Yes
Dish warmer	Yes
Reheating	Yes

Technical Features

Opening mechanism	Push-pull	**Capacity**	21 l
Base material	Stainless steel	**Type of heating**	Fan assisted
Max weight allowance	15 kg	**Accessories included**	Silicone antislip mat

Maximum drawer loading weight	85 kg

Electrical Connection

Plug	(F;E) Schuko	**Voltage (V)**	220-240 V
Nominal power	400 W	**Frequency (Hz)**	50-60 Hz
Current	2 A		

Logistic Information

Width (mm)	597 mm	**Product Height (mm)**	135 mm
Depth (mm)	538 mm		

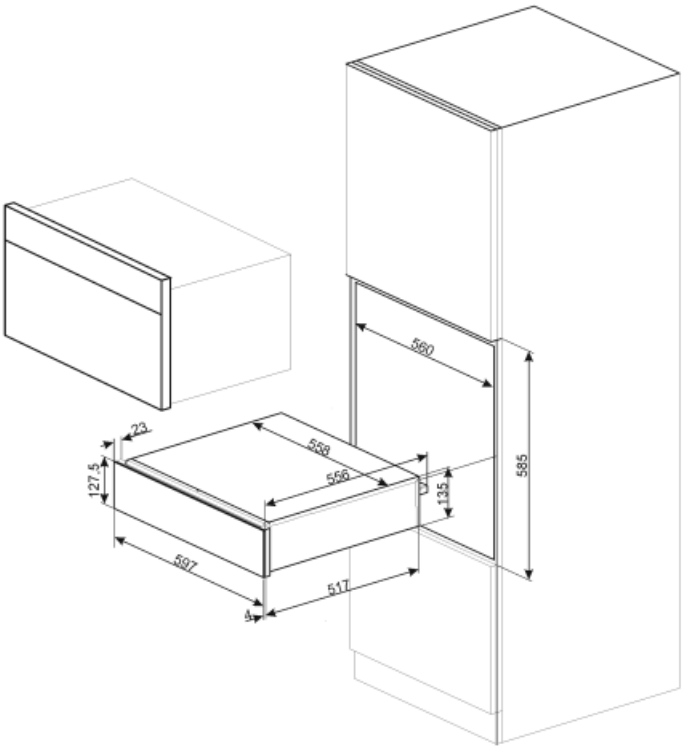

Not included accessories

KITCABLE90UK

Cable with IEC connector and UK plug

Benefit (TT)

Functions available

Functions can be selected directly from the knob: keep warm, reheating, defrost, dish warmer, proofing and mug warmer

Steel base

Presence of non-slip silicone mat; removable and useful for placing dishes without them slipping, to avoid soiling the base of the drawer and to prevent scratches.

Push-pull door opening

With a simple push, the drawer opens and then closes again by pushing it back.