CPRT115G

Product Family	Drawer
Commercial height	14 cm
Type	Warming



Aesthetics

Aesthetic	Linea	**Material**	Painted material
Colour	Neptune Grey	**Logo**	Silk screen
Finishing	Neptune Grey	**Logo position**	External

Controls

Display	Yes	**Type of temperature control**	Electronic
Type of control setting	Touch control	**Display Type**	Digi Touch

Program / Functions

Defrost	Yes
Proofing	Yes
Low temperature cooking	Yes
Sabbath Mode	Yes
Mug warmer	Yes
Keep warm	Yes
Dish warmer	Yes
Reheating	Yes
Timer	Yes
Delay Timer	Yes

Technical Features

Opening mechanism	Push-pull	**Type of heating**	Fan assisted

Base material	Stainless steel	**Minimum temperature**	30 °C
Max weight allowance	15 kg	**Maximum temperature**	85 °C
Maximum drawer loading weight	85 kg	**Accessories included**	Silicone antislip mat
Capacity	21 l		

Electrical Connection

Plug	(F;E) Schuko	**Voltage (V)**	220-240 V
Nominal power	500 W	**Frequency (Hz)**	50-60 Hz
Current	2 A		

Logistic Information

Width (mm)	597 mm	**Product Height (mm)**	135 mm
Depth (mm)	538 mm		

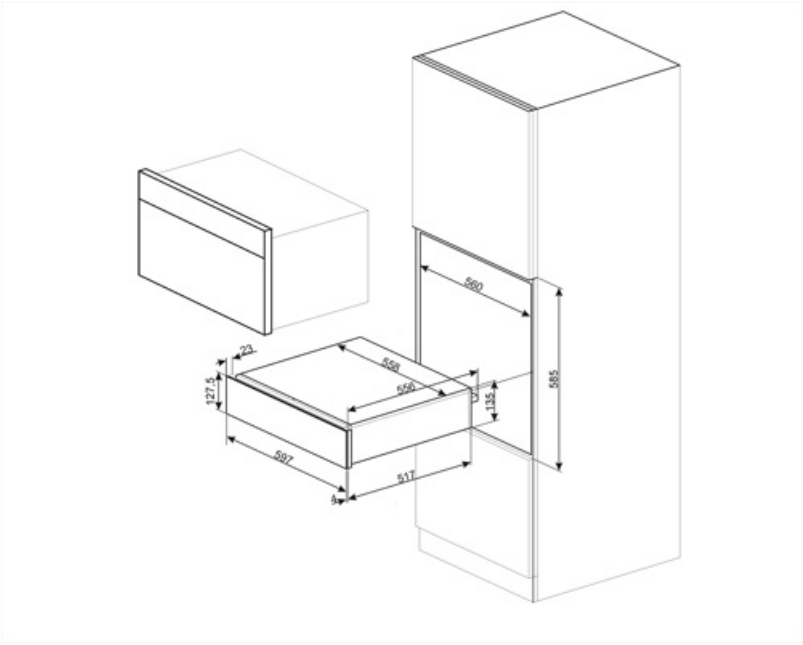

Compatible Accessories

KITCABLE90UK

Cable with IEC connector and UK plug