CPRT615NR

Product Family	Drawer
Commercial height	14 cm
Type	Reheat



Aesthetics

Aesthetic	Dolce Stil Novo	**Glass type**	Eclipse
Colour	Black	**Front panel**	With horizonal strip
Finishing	Glossy black	**Logo**	Silk screen
Component finishing	Copper	**Logo position**	Inside
Material	Glass		

Controls

Display	Yes	**Type of temperature control**	Electronic
Type of control setting	Touch control		

Program / Functions

Defrost	Yes
Proofing	Yes
Defrost	Yes
Sabbath Mode	Yes
Mug warmer	Yes
Keep warm	Yes
Dish warmer	Yes
Reheating	Yes
Timer	Yes
Timer	Yes

Technical Features

Opening mechanism	Push-pull	**Type of heating**	Fan assisted
Base material	Stainless steel	**Minimum temperature**	30 °C
Max weight allowance	15 kg	**Maximum temperature**	85 °C
Maximum drawer loading weight	85 kg	**Accessories included**	Silicone antislip mat
Capacity	21 l		

Electrical Connection

Plug	(F;E) Schuko	**Voltage (V)**	220-240 V
Nominal power	500 W	**Frequency (Hz)**	50-60 Hz
Current	2 A		

Logistic Information

Width (mm)	597 mm	**Product Height (mm)**	135 mm
Depth (mm)	538 mm		

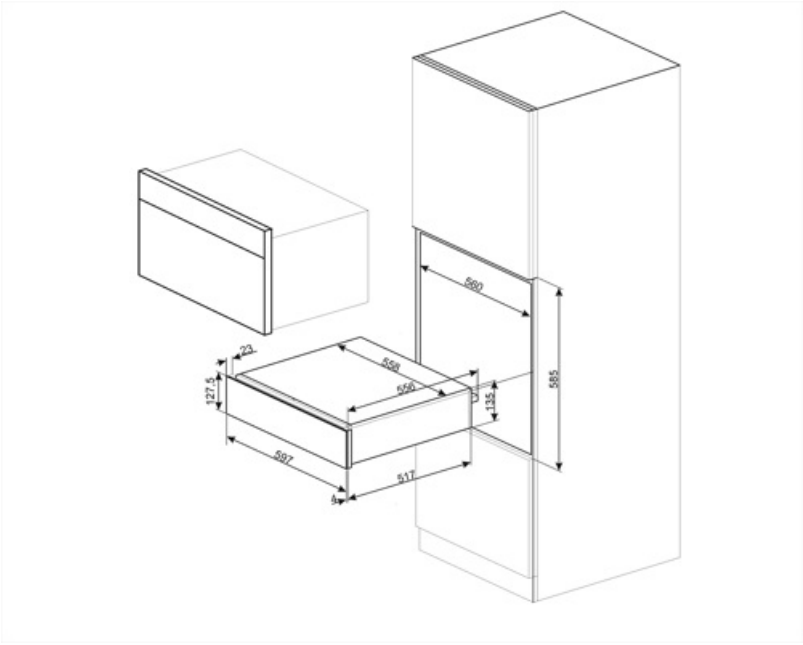

Compatible Accessories

KITCABLE90UK

Cable with IEC connector and UK plug