CPS115B3

Product Family	Drawer
Commercial height	14 cm
Type	Sommelier



Aesthetics

Aesthetic	Linea	**Material**	Glass
Colour	Black	**Logo**	Silk screen
Finishing	Black3	**Logo position**	External

Technical Features

Opening mechanism	Push-pull	**Maximum drawer loading weight**	85 kg
Base material	Stainless steel		
Max weight allowance	15 kg	**Accessories included**	Slavonia durmast wooden shelf, Wine pump, 2 corks, Sparkling wines cork, Cork to pour wine, Anti-drip cork, Solid steel cork for sparkling wines, Champagne/ sparkling wine pliers, Corkscrew sommelier, Red wines cork, Wine thermometer with slipcase, Wine funnel with wooden handle

Electrical Connection

Plug	Not present

Logistic Information

Width (mm)	597 mm	**Product Height (mm)**	135 mm

Depth (mm)	517 mm

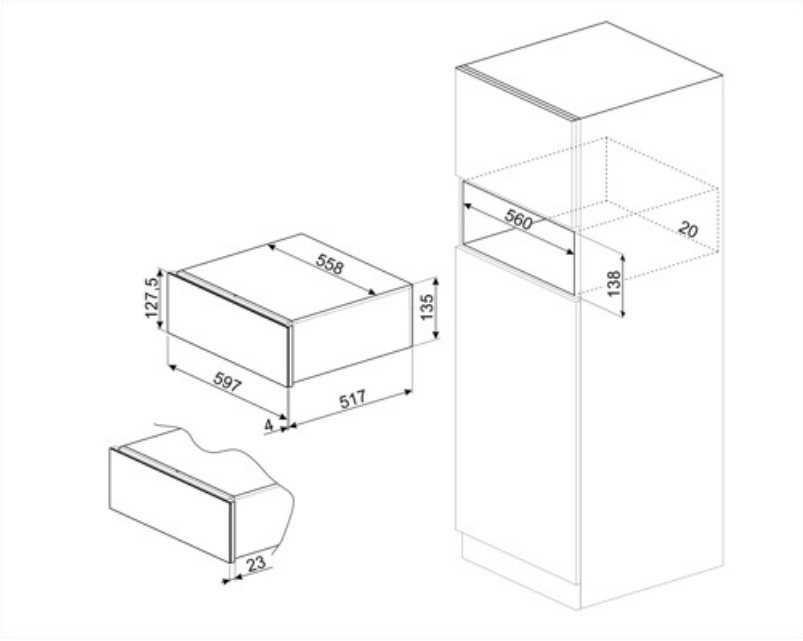

Alternative products



CPS115G

Colour: Neptune Grey