CPV615NR

Product Family	Drawer
Commercial height	14 cm
Type	Sous-vide
Vitality system	Yes



Aesthetics

Aesthetic	Dolce Stil Novo	**Glass type**	Eclipse
Colour	Black	**Front panel**	With horizonal strip
Finishing	Glossy black	**Logo**	Silk screen
Component finishing	Copper	**Logo position**	Inside
Material	Glass		

Controls

Type of control setting	Touch control	**Display Type**	Full Touch

Program / Functions

Preservation cycle	
Vacuum in container cycle	
Chef function	
Welding	

Technical Features

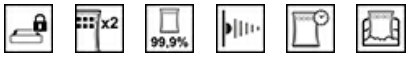

Opening mechanism	Push-pull	**Safety solenoid valve anti oil reflux**	Yes
Base material	Stainless steel 304		
Lid material	Tempered glass with frame		

Lid opening	65° +/- 3°
Drawer stabilisation device	Yes
Drawer maximum protrusion	453 +/- 2 mm
Max weight allowance	15 kg
Maximum drawer loading weight	48 kg
Capacity	6,5 l
Pump flow	4 m³/h
Dehumidification pump cycle	Yes, automatic
Enabling vacuum bar lenght	260 mm
Removable enabling vacuum bar	Yes
Welding type	Double-phase
Preservation cycle duration	1' - 1'20''
Reachable vacuum	2-10 millibar (99,9%)
Vacuum sensor	Yes, accuracy 10 mbar
Accessories included	20x30 V-bags, 25x35 V-Bags

Electrical Connection

Plug	(F;E) Schuko
Nominal power	240 W
Current	1 A
Voltage (V)	220-240 V
Frequency (Hz)	50-60 Hz

Logistic Information

Width (mm)	597 mm
Depth (mm)	570 mm
Product Height (mm)	135 mm

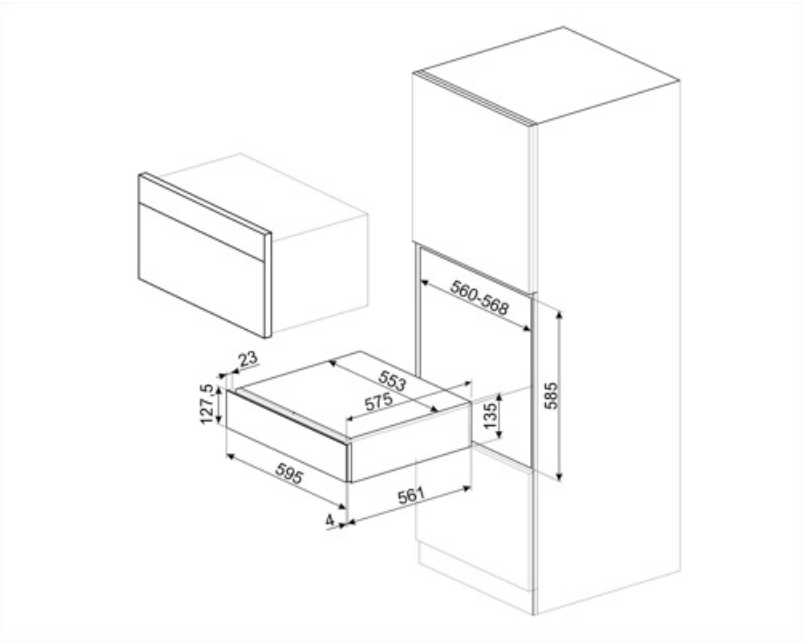

Compatible Accessories



LIFEBOX

Set of 3 containers for vacuum drawer



VBAG1

Bags for sous-vide cooking and preservation, 20x30, 50 pieces

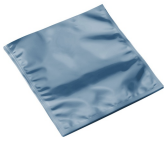

VBAG2

Bags for sous-vide cooking and preservation, 25x35, 50 pieces

Symbols glossary



The Chef function alternates compression and decompression cycles and speeds up some operations, such as marinade or infusion, that otherwise would require a lot of time.



The vacuum in bag function guarantees to create vacuum into bags choosing among three levels. It is also possible to set the 0 level to seal the bag without creating the vacuum.



Sous-vide cooking bags. These bags endure a maximum temperature of 85°C (for 75 hours), 100°C (for 4 hours) or 121°C (for 30 minutes). Suitable for pantry and refrigerator storage, they cannot be storage in the freezer.



Setting the highest vacuum in bag/container level, it is reached a 99,9% vacuum.



The machine can be set at three different sealing levels. Setting the maximum level is possible to seal more bags at the same time with a unique cycle.



Preservation vacuum bags. These bags endure temperatures from -25°C to 70°C (for 2 hours) or 100°C (for 15 minutes). Suitable for pantry, refrigerator and freezer storage, they cannot be used for vacuum cooking.



The stabilization device maintains the drawer open when used, avoiding closing it accidentally.



The vacuum in container function guarantees to create vacuum into glass or plastic containers choosing among three different levels. Use only certificate containers suitable for vacuum and able to resist to a 99,9% vacuum.



The vacuum sensor guarantees the achievement of the maximum vacuum connected to the level set. If the value is not reached, the bag is not sealed.



The machine carries out a double phase welding which guarantees to seal dirty and oily bags as well.