CR329X

Product Family	Drawer
Commercial height	29 cm
Type	Warming



Aesthetics

Aesthetic	Classica	**Type of steel**	Brushed
Colour	Stainless Steel	**Handle**	Classic
Finishing	Fingerproof	**Logo**	Embossed
Material	Stainless steel	**Logo position**	External

Controls

Type of control setting	Control knobs	**Control knobs**	Standard
Type of temperature control	Electro-mechanic	**Controls colour**	Steel effect
No. of controls	1		

Program / Functions

Defrost	Yes
Proofing	Yes
Mug warmer	Yes
Keep warm	Yes
Dish warmer	Yes
Reheating	Yes

Technical Features

Opening mechanism	With handle	**Type of heating**	Fan assisted
Base material	Stainless steel	**Minimum temperature**	30 °C
Max weight allowance	15 kg	**Maximum temperature**	80 °C

Maximum drawer loading weight	85 kg	**Accessories included**	Silicone antislip mat
Capacity	51 l		

Electrical Connection

Plug	(F;E) Schuko	**Voltage (V)**	220-240 V
Nominal power	400 W	**Frequency (Hz)**	50-60 Hz
Current	2 A		

Logistic Information

Width (mm)	597 mm	**Product Height (mm)**	290 mm
Depth (mm)	538 mm		

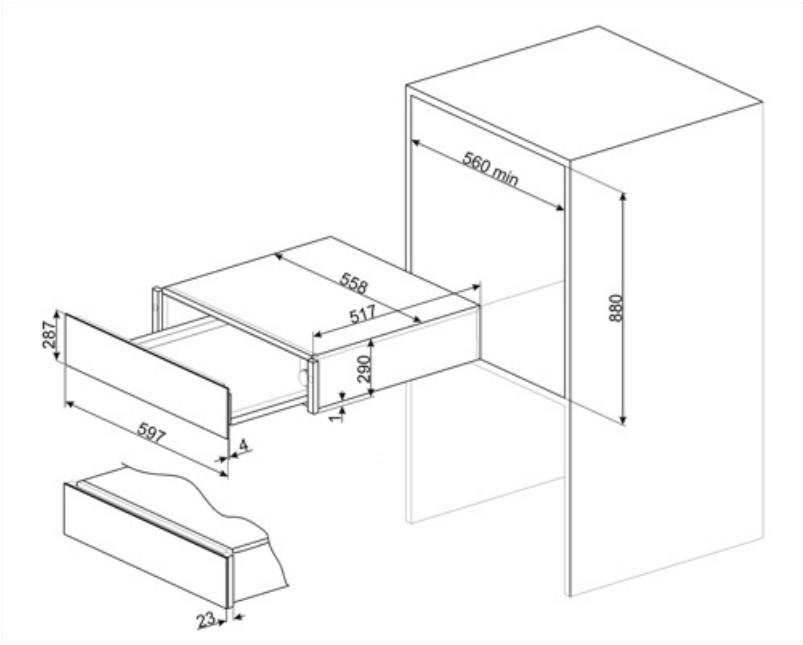

Symbols glossary



Fingerprint proof stainless steel: Fingerprint proof stainless steel keeps stainless steel looking as good as new.