CS7GMXA

Cooker size	70x60 cm
N. of cavities with energy label	1
Hob type	Gas
Type of main oven	Thermoseal
Cleaning system main oven	Vapour Clean
EAN code	8017709286521



Aesthetics

Design	Square design	**Control knobs**	Smeg Classic
Command panel finish	Finger friendly stainless steel	**Controls colour**	Stainless steel
Aesthetic	Classic	**No. of controls**	7
Logo	Assembled st/steel	**Serigraphy colour**	Black
Colour	Stainless steel	**Display**	Touch
Logo position	Facia below the oven	**Door**	With 2 horizontal strips
Finishing	Satin	**Glass type**	eclypse
Upstand	Yes	**Handle**	Smeg Classic
Serie	Sinfonia	**Handle Colour**	Brushed stainless steel
Hob colour	Stainless steel	**Storage compartment**	Door
Type of pan stands	Cast Iron	**Feet**	Silver
Type of control setting	Control knobs	**Plinth**	Stainless steel

Programs / Functions

No. of cooking functions 8

Traditional cooking functions

- Static
- Circulaire
- Turbo
- Eco
- Small grill
- Large grill
- Fan grill (large)
- Fan assisted bottom

Cleaning functions

 Vapour Clean

Hob technical features



Total no. of cook zones 5

Front left - Gas - AUX - 1.00 kW
Rear left - Gas - Semi Rapid - 1.80 kW
Central - Gas - UR - 4.20 kW
Rear right - Gas - Semi Rapid - 1.80 kW
Front right - Gas - Semi Rapid - 1.00 kW

Type of gas burners	Standard	**Gas safety valves**	Yes
Automatic electronic ignition	Yes	**Burner caps**	Matte black enamelled

Main Oven Technical Features



No. of lights	1	**Removable inner door**	Yes
Fan number	1	**Total no. of door glasses**	3
Gross volume, 1st cavity	79 l	**No.of thermo-reflective door glasses**	2
Cavity material	Ever Clean enamel	**Safety Thermostat**	Yes
No. of shelves	5	**Cooling system**	Tangential
Type of shelves	Metal racks	**Usable cavity space dimensions (HxWxD)**	360x444x425 mm
Light type	Halogen	**Temperature control**	Electro-mechanical
Light Power	40 W	**Lower heating element power**	1200 W
Cooking time setting	Start and Stop	**Upper heating element - Power**	1000 W
Light when oven door is open	Yes	**Grill elememt**	1700 W
Door opening	Flap down	**Large grill - Power**	2700 W
Removable door	Yes	**Circular heating element - Power**	2000 W
Full glass inner door	Yes	**Grill type**	Electric

Options Main Oven

Timer	Yes	**Minimum Temperature**	50 °C
End of cooking acoustic alarm	Yes	**Maximum temperature**	260 °C

Accessories included for Main Oven & Hob

Rack with back and side stop	2	**Grill mesh**	1
40mm deep tray	1	**Telescopic Guide rails, partial Extraction**	1

Electrical Connection

Electrical connection rating	2700 W	**Power supply cable length**	120 cm
Current	12 A	**Frequency**	50/60 Hz
Voltage	220-240 V	**Terminal block**	3 poles
Type of electric cable installed	Yes, Single phase	**Plug**	(I) Australia

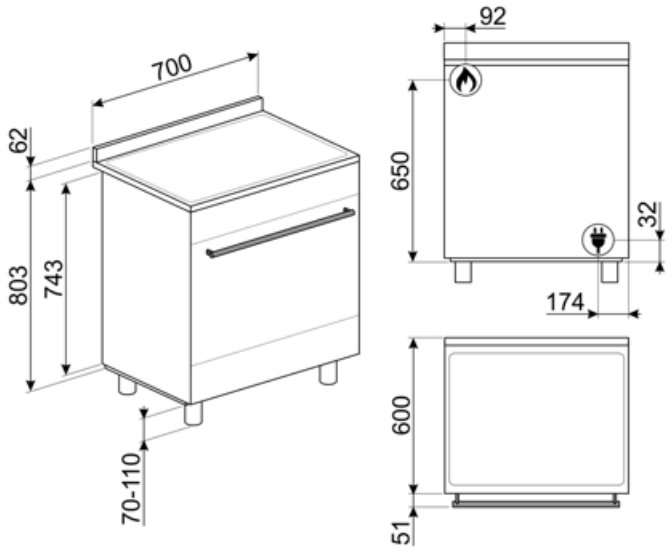

Compatible Accessories



AIRFRY2

Air fryer tray. Ideal for recreating traditional frying in the oven, but with fewer calories and less fat. It allows you to cook quickly and simply dishes such as French fries, fried vegetables and fish, ensuring perfect browning and crispiness.



BN620-1

Enamelled tray, 20mm deep



BNP608T

Teflon-coated tray, 8mm depth, to be placed on the grid



GTT

Totally extractable telescopic guides (1 level) Extraction: 433 mm Material: Stainless steel AISI 430 polished

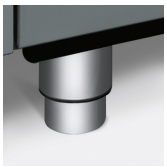

KITPAX

Heigh extension feet (950 mm), stainless steel, suitable for Master, Sinfonia and Concerto cookers



PALPZ

Pizza shovel with fold away handle width: 315mm length : 325mm

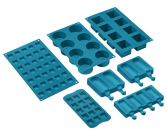

SMOLD

Set of 7 silicone moulds for ice creams, ice lollies, pralines, ice cubes or to portion food. Usable from -60°C to +230°C



BBQ

Double sided plate BBQ. Suitable for recreating succulent and crispy dishes in the oven with the typical taste of grilled cooking. The ribbed side is particularly suitable for meats and cheeses. The smooth side for fish, seafood and vegetables.



BN640

Enamelled tray, 40mm deep



GTP

Partially extractable telescopic guides (1 level) Extraction: 300 mm Material: Stainless steel AISI 430 polished



KITC7X

Splashback, 70x75 cm, stainless steel, suitable for Master and Sinfonia cookers



KITPBX

Height reduction feet (850 mm)



SFLK1

Child lock

Symbols glossary



Heavy duty cast iron pan stands: for maximum stability and strength.



Air cooling system: to ensure a safe surface temperatures.



Enamel interior: The enamel interior of all Smeg ovens have a special antacid lining which helps keep the interior clean by reducing the amount of cooking grease adhering to it.



Fan assisted base: the mix of fan and lower heating element alone allows to finish cooking foods already cooked on the surface but not internally more quickly. This system is recommended to finish cooking foods that are already well cooked on the surface, but not internally, which therefore require a moderate higher heat. Ideal for any type of food.



Circulaire: The combination of the fan and circular element around it gives a hot air cooking method. This provides many benefits including no preheat if cook time is more than 20 minutes, no flavour transfer when cooking different foods at the same time, less energy, and shorter cook times. Good for all types of food.



Grill element: Using of grill gives excellent results when cooking meat of medium and small portions, especially when combined with a rotisserie (where possible). Also ideal for cooking sausages and bacon.



Fan with grill element: The fan reduces the fierce heat from the grill, providing an excellent method of grilling various foods, chops, steaks, sausages etc. giving even browning and heat distribution, without drying out the food. The top two levels recommended for use, and the lower part of the oven can be used to keep items warm at the same time, an excellent facility when cooking a grilled breakfast. Half grill (centre portion only) is ideal for small quantities of food.



All glass inner door: All glass inner door, a single flat surface which is simple to keep clean.



Side lights: Two opposing side lights increase visibility inside the oven.



Installation in column: Installation in column



Triple glazed doors: Number of glazed doors.



Fingerprint proof stainless steel: Fingerprint proof stainless steel keeps stainless steel looking as good as new.



Upper and lower element only: a traditional cooking method best suited for single items located in the centre of the oven. the top pf the oven will always be hottest. Ideal for roast, fruit cakes, bread etc.



ECO: The combination of the grill, fan and lower element is particularly suitable for cooking small quantities of food.



Half grill: For rapid cooking and browning of foods. Best results can be obtained by using the top shelf for small items, the lower shelves for larger ones, such as chops or sausages. For half grill heat is generated only at the centre of the element, so is ideal for smaller quantities.



Circulaire with upper and lower elements: The use of the fan with both elements allows food to be cooked quickly and effectively, ideal for large joints that require thorough cooking. It offers a similar result to rotisserie, moving the heat around the food, instead of moving the food itself, enabling any size or shape to be cooked.



The inner door glass: can be removed with a few quick movements for cleaning.



Automatic opening: some models have Automatic opening door when the cycle is finished which is a perfect solution for handle-less kitchen units as no handle is needed. For safety reasons, the door locks automatically when the machine is in use to avoid it being opened inadvertently.

The oven cavity has 5 different cooking levels.

Telescopic rails: allow you to pull out the dish and check it without having to remove it from the oven entirely.

Ultra rapid burners: Powerful ultra rapid burners offer up to 5kw of power.

Vapour Clean: a simple cleaning function using steam to loosen deposits in the oven cavity.

4.3 inch display with LED technology, usability with knobs + 3 touch keys

Knobs control