CVI040BE



Family	Wine Cooler
Installation	Built-in
Built-In Niche	88 cm
Reference width	Until 60
Reference height	Until 100
Defrost	Automatic
Cooling type	Fan assisted
Hinge type	Variable hinge
Hinge position	Right
Reversible door	Yes

Wine cellar compartment features

Number of fixed shelves	1
Number of removable shelves	4
Number of removable and folding shelves	1
No. of lights	4
Shelves material	Wood
Removable shelves on telescopic guide rails	Yes
Type of internal light	Led activated with EMOTION system
Air filter	Activated charcoal filter

Programs/Functions

Control setting	Touch control	**Control lock**	Yes
Controls	Inner, in the cellar compartment	**Lighting forced ON**	In a maximum period
Display	LED	**Fan forced ON**	Yes
Functions display	Temperature alarm, Demo Mode, Temperature value	**Temperature Alarm**	Yes
Power on lamp	Yes	**Door open alarm**	Yes

Technical Features

Adjustable temperature zones	2	**Compressor type**	Low vibration compressor

Independent cooling systems	2	**Refrigerant gas type**	R600a
Number of door glasses	3	**Refrigerant Quantity (gr)**	26 g
Temperature range	5-20 °C	**Foam agent**	HFO
Type of temperature control	Electronic	**Metal panel on the back of the fridge**	Metal
Anti-UV door glass	Yes	**Door opening type**	WIth electronic opening system
Integrated heating element	Yes	**Door closing type**	With E MOTION electronic closing system
Number of compressors	1		

Performance / Energy Label

Max Capacity (bottles 0,75lt)	40	**Sum of the volumes of the chill compartment(s) and the unfrozen compartment(s)**	126 l
Annual energy consumption	147 kWh/a	**Climatic class**	SN, N, ST
Energy efficiency class	G	**EEI**	171 %
Airborne acoustical noise emission class	C	**Noise level**	38 dB(A) re 1 pW
Total volume	126 l		

Electrical Connection

Electrical connection rating	65 W	**Frequency (Hz)**	50 Hz
Current	0,3 A	**Power supply cable length**	150 cm
Voltage (V)	220-240 V	**Plug**	(F;E) Schuko

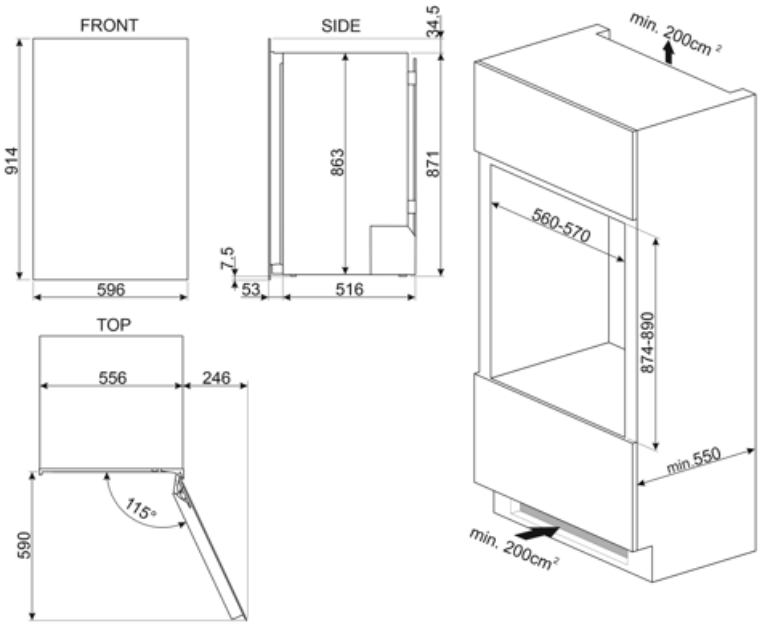

Compatible Accessories

KIT040BE



Symbols glossary



The automatic defrost system works by automatically defrosting at regular intervals eliminating the need to defrost altogether.



Energy efficiency class G



E MOTION opening system: the E MOTION electronic system allows to open the appliance semi-automatically by applying pressure on the door surface.



LED interior lighting: is a more energy efficient and long lasting way of illuminating the interior of the appliance.



Touch controls: Easy to use touch controls allow the appliance to be programmed at the touch of a button.



A: Product drying performance, measured from A+++ to D / G depending on the product family



LED display: to show programmes, functions and options selected and the time to the end of the cycle.



Ventilated: Forced distribution of cold air in the refrigerator compartment, which allows even temperature distribution within the fridge.



Built-in niche