CVI138LG

Product Family	Wine Cooler
Installation	Built-in
Built-In Niche	82-87 cm
Defrost	Automatic
Cooling type	Fan assisted
Hinge type	Standard
Hinge position	Left

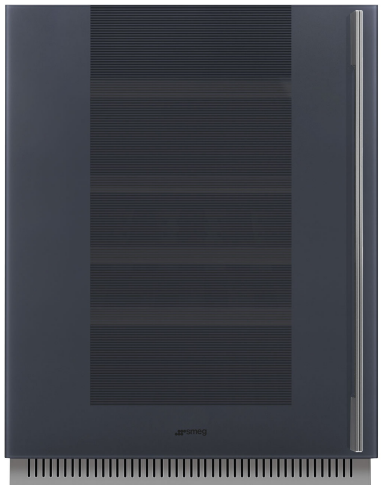

Wine cooler compartment features

Number of fixed shelves	2
Number of removable shelves	3
No. of lights	2
Shelves material	Wood
Removable shelves on telescopic guide rails	Yes
Type of internal light	LED
Air filter	Activated charcoal filter

Programs / Functions

Control setting	Touch control	**Control lock**	Yes
Controls	Internal, in the compartment	**Lighting forced ON**	In a maximum period
Display	LED	**Fan forced ON**	Yes
Functions display	Temperature alarm, Temperature value	**Temperature Alarm**	Yes
Power on lamp	Yes	**Door open alarm**	Yes

Technical Features

Adjustable temperature zones	2	**Compressor type**	Low vibration compressor
		Refrigerant gas type	R600a
		Refrigerant Quantity (gr)	20 g

Independent cooling systems	2
Number of door glasses	2
Temperature range	5-20 °C
Type of temperature control	Electronic
Anti-UV door glass	Yes
Integrated heating element	Yes
Number of compressors	1
Foam agent	HFO
Metal panel on the back of the fridge	Metal
Adjustable feet	2 Front + 2 Rear
Door opening type	With handle

Performance / Energy Label

Max Capacity (bottles 0,75lt)	38
Annual energy consumption	140 kWh/year
Energy efficiency class	G
Airborne acoustical noise emission class	C
Total volume	114 l
Sum of the volumes of the chill compartment(s) and the unfrozen compartment(s)	114 l
Climatic class	SN, N, ST
EEI	165 %
Noise level	38 dB(A) re 1 pW

Electrical Connection

Nominal power	40 W
Current	0.4 A
Voltage (V)	220-240 V
Frequency (Hz)	50 Hz
Power supply cable length	180 cm
Plug	(F;E) Schuko

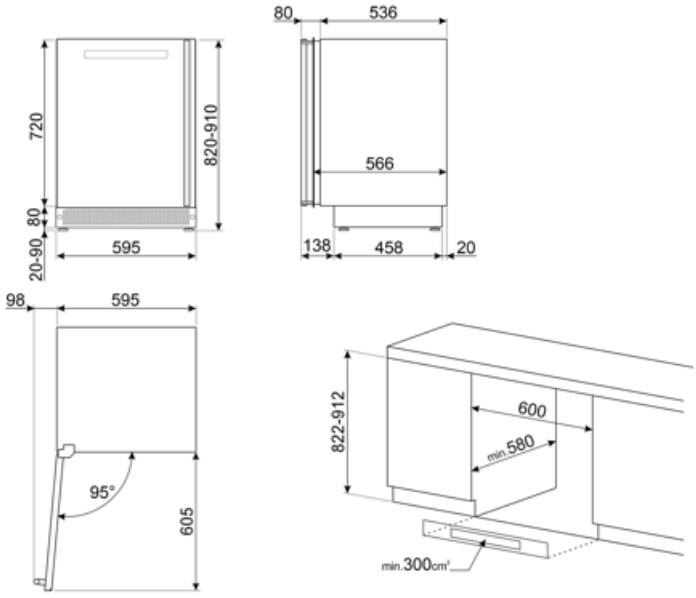

Symbols glossary



A: Product drying performance, measured from A+++ to D / G depending on the product family



LED display: to show programmes, functions and options selected and the time to the end of the cycle.



LED interior lighting: is a more energy efficient and long lasting way of illuminating the interior of the appliance.



Touch controls: Easy to use touch controls allow the appliance to be programmed at the touch of a button.



The automatic defrost system works by automatically defrosting at regular intervals eliminating the need to defrost altogether.



Ventilated: Forced distribution of cold air in the refrigerator compartment, which allows even temperature distribution within the fridge.



Built-in niche



Energy efficiency class G