CVI621NR3

Product Family	Wine Cooler
Installation	Built-in
Built-In Niche	45 cm
Defrost	Automatic
Cooling type	Fan assisted
Hinge type	Standard
Hinge position	Right
Reversible door	Yes



Wine cooler compartment features

Number of fixed shelves	1
Number of removable shelves	2
Shelves material	Wood
Removable shelves on telescopic guide rails	Yes
Type of internal light	LED
Air filter	Activated charcoal filter

Programs / Functions

Control setting	Touch control	**Control lock**	Yes
Controls	Internal, in the compartment	**Lighting forced ON**	In a maximum period
Display	LED	**Fan forced ON**	Yes
Functions display	Temperature alarm, Temperature value	**Temperature Alarm**	Yes
Power on lamp	Yes	**Door open alarm**	Yes

Technical Features

Adjustable temperature zones	1	**Number of compressors**	1
Independent cooling systems	1	**Compressor type**	Low vibration compressor
Number of door glasses	2	**Refrigerant gas type**	R600a

Temperature range	5-20 °C	**Refrigerant Quantity (gr)**	20 g
Type of temperature control	Electronic	**Foam agent**	HFO
Anti-UV door glass	Yes	**Metal panel on the back of the fridge**	Metal
Integrated heating element	Yes	**Door opening type**	With push pull system

Performance / Energy Label

Max Capacity (bottles 0,75lt)	21	**Sum of the volumes of the chill compartment(s) and the unfrozen compartment(s)**	56 l
Annual energy consumption	100 kWh/year	**Climatic class**	SN, N, ST
Energy efficiency class	F	**EEI**	124 %
Airborne acoustical noise emission class	C	**Noise level**	36 dB(A) re 1 pW
Total volume	56 l		

Electrical Connection

Nominal power	40 W	**Frequency (Hz)**	50 Hz
Current	0.4 A	**Power supply cable length**	180 cm
Voltage (V)	220-240 V	**Plug**	(F;E) Schuko

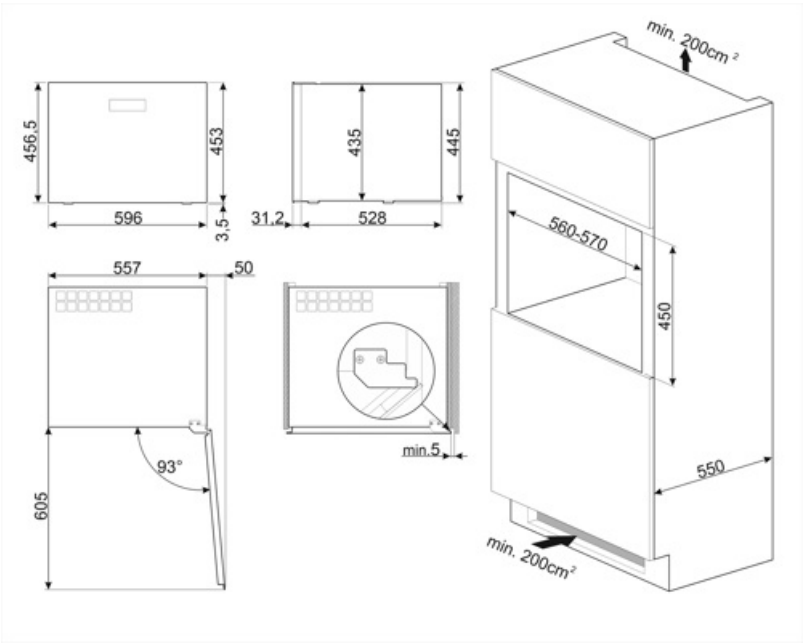

Symbols glossary



The automatic defrost system works by automatically defrosting at regular intervals eliminating the need to defrost altogether.



LED display: to show programmes, functions and options selected and the time to the end of the cycle.



LED interior lighting: is a more energy efficient and long lasting way of illuminating the interior of the appliance.



Touch controls: Easy to use touch controls allow the appliance to be programmed at the touch of a button.



A+: Energy efficiency class A+ helps to save up to 10% energy compared to class A. Maximum performance with minimum consumption is guaranteed.



Ventilated: Forced distribution of cold air in the refrigerator compartment, which allows even temperature distribution within the fridge.



Built-in niche



Energy efficiency class F