CVI638LN3

Family	Wine Cooler
Installation	Built-in
Built-In Niche	82-87 cm
Defrost	Automatic
Cooling type	Fan assisted
Hinge type	Standard
Hinge position	Left



Wine cellar compartment features

Number of fixed shelves	2
Number of removable shelves	3
Shelves material	Wood
Removable shelves on telescopic guide rails	Yes
Type of internal light	Led
Air filter	Activated charcoal filter

Programs/Functions

Control setting	Touch control	**Control lock**	Yes
Controls	Inner, in the cellar compartment	**Lighting forced ON**	In a maximum period
Display	LED	**Fan forced ON**	Yes
Functions display	Temperature alarm, Temperature value	**Temperature Alarm**	Yes
Power on lamp	Yes	**Door open alarm**	Yes

Technical Features

Adjustable temperature zones	2	**Compressor type**	Low vibration compressor
Independent cooling systems	2	**Refrigerant gas type**	R600a
Number of door glasses	2	**Refrigerant Quantity (gr)**	20 g

Temperature range	5-20 °C	**Foam agent**	HFO
Type of temperature control	Electronic	**Metal panel on the back of the fridge**	Metal
Anti-UV door glass	Yes	**Adjustable feet**	2 Front + 2 Rear
Integrated heating element	Yes	**Door opening type**	With handle
Number of compressors	1		

Performance / Energy Label

Max Capacity (bottles 0,75lt)	38	**Sum of the volumes of the chill compartment(s) and the unfrozen compartment(s)**	114 l
Annual energy consumption	140 kWh/a	**Climatic class**	SN, N, ST
Energy efficiency class	G	**EEI**	165 %
Airborne acoustical noise emission class	C	**Noise level**	38 dB(A) re 1 pW
Total volume	114 l		

Electrical Connection

Electrical connection rating	40 W	**Frequency (Hz)**	50 Hz
Current	0,4 A	**Power supply cable length**	180 cm
Voltage (V)	220-240 V	**Plug**	(F;E) Schuko

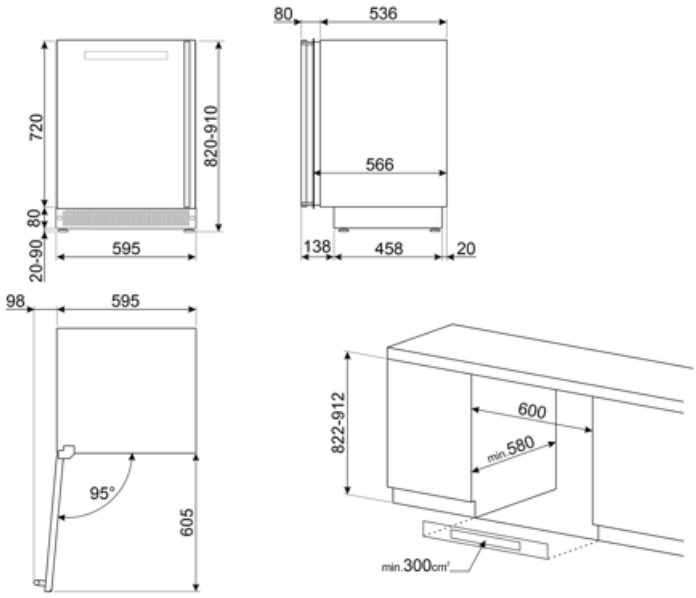

Symbols glossary



The automatic defrost system works by automatically defrosting at regular intervals eliminating the need to defrost altogether.



Energy efficiency class G



Ventilated: Forced distribution of cold air in the refrigerator compartment, which allows even temperature distribution within the fridge.



Built-in niche



A: Product drying performance, measured from A+++ to D / G depending on the product family



LED display: to show programmes, functions and options selected and the time to the end of the cycle.



LED interior lighting: is a more energy efficient and long lasting way of illuminating the interior of the appliance.



Touch controls: Easy to use touch controls allow the appliance to be programmed at the touch of a button.