CX113GMBL

Cooker size	110x60 cm
N. of cavities with energy label	2
Cavity heat source	ELECTRICITY
Hob type	Gas
Type of main oven	Thermo-ventilated
Type of second oven	Thermo-ventilated
Cleaning system main oven	Ever Clean enamel
EAN code	8017709348212
Energy efficiency class	A
Energy efficiency class, second cavity	A



Aesthetics

Design	Standard	**Type of control knobs**	Smeg Classic
Command panel finish	Enamelled metal	**Controls colour**	Stainless steel
Aesthetic	Classica	**No. of controls**	8
Logo	Assembled	**Serigraphy colour**	Silver
Colour	Black	**Display name**	DigiScreen
Logo position	Command panel	**Door**	With frame
Finishing	Glossy black	**Glass type**	Black
Series	Concerto	**Handle**	Smeg Classic
Hob colour	Black enamel	**Handle Colour**	Brushed stainless steel
Type of pan stands	Cast Iron	**Feet color**	none
Type of control setting hob	Control knobs	**Plinth**	Black

Programs / Functions main oven

No. of cooking functions 4

Traditional cooking functions

Circulaire

Small grill

Large grill

Fan grill (large)

Programs / Functions auxiliary oven

Cooking functions cavity 2	1

Programs / Functions third oven

No. of functions third oven	1
Full grill	

Hob technical features



Total no. of cook zones 6

Left - Gas - 2UR (dual) - 4.20 kW
Rear left - Gas - Rapid - 3.00 kW
Front left - Gas - AUX - 1.00 kW
Rear right - Gas - Semi Rapid - 1.80 kW
Front right - Gas - Semi Rapid - 1.80 kW
Right - Gas - Rapid - 3.00 kW

Type of gas burners	Standard	**Gas safety valves**	Yes
Automatic electronic ignition	Yes	**Burner caps**	Matt black enamelled

Main Oven Technical Features



No. of lights	1	**Removable door**	Yes
Fan number	1	**Full glass inner door**	Yes
Net volume of the cavity	61 l	**Removable inner door**	Yes
Gross volume, 1st cavity	70 l	**Total no. of door glasses**	3
Cavity material	Ever Clean enamel	**No.of thermo-reflective door glasses**	1
No. of shelves	4	**Safety Thermostat**	Yes
Type of shelves	Metal racks	**Cooling system**	Tangential
Light type	Halogen	**Usable cavity space dimensions (HxWxD)**	316x460x412 mm
Light Power	40 W	**Temperature control**	Electro-mechanical
Cooking time setting	Start and Stop	**Circular heating element - Power**	2000 W
Door opening	Side opening		

Options Main Oven

Timer	Yes	**Minimum Temperature**	50 °C
End of cooking acoustic alarm	Yes	**Maximum temperature**	245 °C

Second Oven Technical Features



Fan number	1
Net volume of the second cavity	61 l
Gross volume, 2nd cavity	70 l
Cavity material	Ever Clean enamel
No. of shelves	4
Type of shelves	Metal racks
No. of lights	1
Light type	Halogen
Light Power	40 W
Door opening	Side opening
Removable door	Yes
Full glass inner door	Yes
No. total door glasses	2
No. thermo-reflective door glasses	1
Safety Thermostat	Yes
Cooling system	Tangential
Usable cavity space dimensions (HxWxD)	605x275x370 mm
Temperature control	Electro-mechanical
Circular heating element - Power	2500 W

Options Auxiliary Oven

Minimum Temperature	50 °C
Maximum temperature	245 °C

Third Oven Technical Features



Net volume, 3rd cavity	35 l
Gross volume, 3rd cavity	41 l
Cavity material	Ever Clean enamel
No. of shelves	2
Type of shelves	Metal racks
No. of lights	1
Light type	Halogen
Light Power	40 W
Door opening	Flap down
Removable door	Yes
Full glass inner door	Yes
Removable inner door	Yes
No. total door glasses	3
No. of thermo-reflective door glasses	1
Safety Thermostat	Yes
Cooling system	Tangential
Usable cavity space dimensions (HxWxD)	169x440x443 mm
Temperature control	Electro-mechanical
Large grill - Power	2700 W
Grill type	Electric
Tilting grill	Yes

Options Third Oven

Minimum Temperature	50 °C
Maximum temperature	260 °C

Accessories included for Main Oven & Hob

Rack with back and side stop	1
20mm deep tray	1
40mm deep tray	1
Grill mesh	1

Accessories included for Secondary Oven

Grill mesh	1

Rack with back and side stop	1
40mm deep tray	1

Electrical Connection

Electrical connection rating	8400 W	**Additional connection modalities**	Double and Three Phase
Current	37 A	**Frequency**	50/60 Hz
Voltage	220-240 V	**Terminal block**	5 poles
Voltage 2 (V)	380-415 V	**Plug**	Not present
Electric cable	Installed, Single phase		

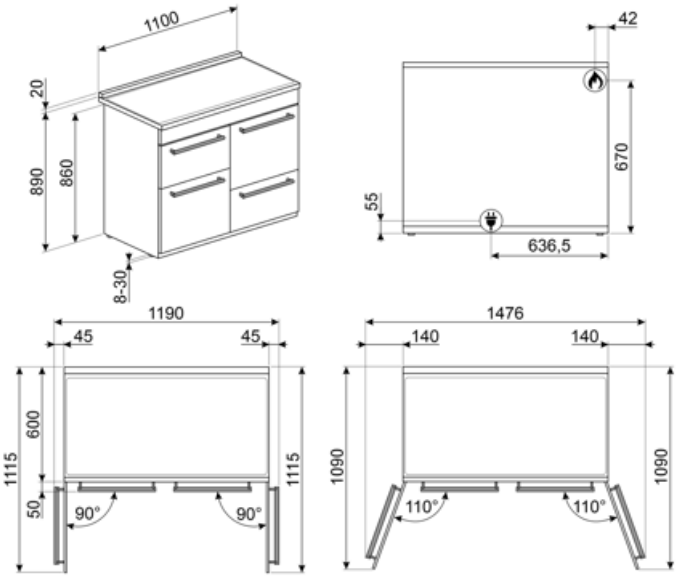

Compatible Accessories



AIRFRY2

Air fryer tray. Ideal for recreating traditional frying in the oven, but with fewer calories and less fat. It allows you to cook quickly and simply dishes such as French fries, fried vegetables and fish, ensuring perfect browning and crispiness.



BN620-1

Enamelled tray suitable for 45 cm and 60 cm ovens. Depth 20 mm. Perfect for a wide range of savoury and sweet baking.



BNP608T

Teflon-coated tray, 8 mm depth, to be placed on the grid



GTP

Partially extractable telescopic guides (1 level), suitable for traditional ovens. Made in stainless steel, they guarantee stability and facilitate the smooth extraction of the trays.



KITH93

Height extension kit (950mm), black, suitable for TR93 cookers (945-960mm)



SFLK1

Child lock



WOKGHU

Cast iron WOK Support



BBQ

Double sided plate BBQ. Suitable for recreating succulent and crispy dishes in the oven with the typical taste of grilled cooking. The ribbed side is particularly suitable for meats and cheeses. The smooth side for fish, seafood and vegetables.



BN640

Enamelled tray suitable for 45cm and 60cm ovens. Depth 540 mm. Perfect for cooking and roasting meat and fish in sauces. Also ideal for experimenting with lighter and crunchy side dishes



GRM

Coffee machine support



GTT

Totally extractable telescopic guides (1 level), suitable for traditional ovens. Made in stainless steel, they guarantee stability and facilitate the smooth extraction of the trays.



PALPZ

Pizza shovel with folding handle. Dimensions L31.5 x H32.5 cm. Easy and convenient to use and store. Perfect for serving pizza, bread and savory pastries in a safe and professional way.

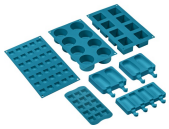

SMOLD

Set of 7 silicone moulds for ice creams, ice lollies, pralines, ice cubes or to portion food. Usable from -60°C to +230°C

Symbols glossary



Heavy duty cast iron pan stands: for maximum stability and strength.



Installation in column: Installation in column.



Air cooling system: to ensure a safe surface temperatures.



Double glazed doors: Number of glazed doors.



Ever Clean Enamel: Ever Clean enamel is applied electrostatically, corner to corner and edge to edge to prevent cracking or cracks over time. It is a particular pyrolytic enamel, resistant to acids which, in addition to being pleasantly bright, promotes greater cleaning of the oven walls, thanks to its lower porosity. It is baked at over 850 °C and slowly polymerized at a scientifically determined rate to ensure uniform depth and strength. Ever Clean enamel creates an impeccable finish both on the inside of the oven and on the trays, making the surfaces of the oven incredibly easy to maintain over time as it reduces the adhesion of fat during cooking.



Circulaire: it is the perfect function for cooking all types of dishes in a more delicate way. The heat comes from the back of the oven and is distributed quickly and evenly. The fan is active. It is also ideal for cooking on multiple levels without mixing smells and flavors.



Grill element: Using of grill gives excellent results when cooking meat of medium and small portions, especially when combined with a rotisserie (where possible). Also ideal for cooking sausages and bacon.



Fan grill: very intense heat coming only from above from a double heating element. The fan is active. It allows the optimal grilling of thickest meats. Ideal for large cuts of meat.



The inner door glass: can be removed with a few quick movements for cleaning.



The oven cavity has 2 different cooking levels.



Energy efficiency class A



Knobs control



4.3 inch display with LED technology, usability with knobs + 3 touch keys



Triple glazed doors: Number of glazed doors.



Fan assisted: Intense and homogeneous traditional cooking, also suitable for complex recipes. The fan is active and the heat comes from below and from above at the same time. Ventilated cooking ensures a faster and more homogeneous result, leaving fragrant foods outside and moister inside. Ideal for baked pasta, biscuits, roasts and cobblers.



Grill: Very intense heat coming only from above from a double heating element. The fan is not active. Provides excellent grilling and gratinating results. Used at the end of cooking, it gives a uniform browning to dishes.



Half grill: For rapid cooking and browning of foods. Best results can be obtained by using the top shelf for small items, the lower shelves for larger ones, such as chops or sausages. For half grill heat is generated only at the centre of the element, so is ideal for smaller quantities.



All glass inner door: All glass inner door, a single flat surface which is simple to keep clean.



Side lights: Two opposing side lights increase visibility inside the oven.



The oven cavity has 4 different cooking levels.

Electronic control: Allows you to maintain temperature inside the oven with the precision 2-3 ° C. This enables to cook meals that are very sensitive to temperature changes, such as cakes, souffles, puddings.

Ultra rapid burners: Powerful ultra rapid burners offer up to 5kw of power.

The capacity indicates the amount of usable space in the oven cavity in litres.

Tilting grill: the tilting grill can be easily unhooked to move the heating element and clean the roof of the appliance in one simple step.

The capacity indicates the amount of usable space in the oven cavity in litres.

Benefit (TT)

Gas hob

Gas provides permanent control of the heat source and the temperature change is immediate

Equipped with a thermocouple, the gas supply is cut off if the flame is extinguished for greater safety.

Ever Clean Enamel

Easy oven cleaning thanks to special pyrolytic enamel

Touch control

Easy and intuitive timer setting with a single touch

True-convection

The best cooking performances guaranteed by ventilated circular flow

Multiple fans and heating elements guarantee the perfect aerodynamic heat flow, allowing homogeneous and quicker cooking inside the cavity.

Multilevel cooking

Several cooking levels allow maximum flexibility of use

Multilevel halogen light

Internal halogen lighting on different levels guarantees excellent visibility

Removalble inner glass

Internal door glasses are easily removable for complete cleaning

Tangential cooling

New cooling system with tangential fan and airflow from the door to the splashback

Adjustable height

Cooker top flushed with the working area thanks to adjustable feet

Cold door

During any function, the external door glass is cold, avoiding any risk of burns

AirFry (AIRFRY optional accessory)

Lighter and tastier food thanks to airfry basket (optional accessory)

BBQ (optional accessory)

Barbecue cooking directly in the oven with the double-sided grill (BBQ optional accessory)

Pizza stone (optional accessory)

Baking with refractory stone for soft and crispy pizza and yeast products (STONE optional accessory)

Isothermic Cavity

The best cooking performance at the highest energy efficiency

Single turbine

The oven has a fan equipped with a circular heating element allowing cooking with rotating heat