CX93GMBL

Cooker size	90x60 cm
N. of cavities with energy label	2
Cavity heat source	Electric
Hob type	Gas
Type of main oven	Thermo-ventilated
Type of second oven	Thermo-ventilated
EAN code	8017709334536
Energy efficiency class	A
Energy efficiency class, second cavity	B



Aesthetics

Design	Standard	**Control knobs**	Smeg Classic
Command panel finish	Enamelled metal	**Controls colour**	Stainless steel
Aesthetics	Classic	**No. of controls**	8
Logo	Silk screen	**Serigraphy colour**	Silver
Colour	Black	**Display**	Touch
Logo position	Command panel	**Door**	Full glass
Finishing	Gloss Black	**Glass type**	Black
Series	Concert	**Handle**	Smeg Classic
Hob colour	Black enamel	**Handle Colour**	Polished stainless steel
Type of pan stands	Cast Iron	**Feet**	Black
Type of control setting	Control knobs		

Programs / Functions

No. of cooking functions	1

Traditional cooking functions

Circulaire

Programs / Functions Auxiliary Oven

Cooking functions cavity 2	1

Programme / Functions Third Oven

No. of functions third oven	1
Full grill	

Hob technical features



Total no. of cook zones 5

Front left - Gas - Rapid - 2.90 kW
Rear left - Gas - Semi Rapid - 1.80 kW
Central - Gas - UR - 4.00 kW
Rear right - Gas - Semi Rapid - 1.80 kW
Front right - Gas - AUX - 1.00 kW

Type of gas burners	Standard	**Gas safety valves**	Yes
Automatic electronic ignition	Yes	**Burner caps**	Matte black enamelled

Main Oven Technical Features



No. of lights	1	**Removable door**	Yes
Fan number	1	**Full glass inner door**	Yes
Net volume of the cavity	61 litres	**Removable inner door**	Yes
Gross volume, 1st cavity	70 l	**Total no. of door glasses**	3
Cavity material	Easy clean enamel	**No.of thermo-reflective door glasses**	1
Shelf positions	4	**Safety Thermostat**	Yes
Type of shelves	Metal racks	**Cooling system**	Tangential
Light type	Halogen	**Usable cavity space dimensions (HxWxD)**	316x460x412 mm
Light power	40 W	**Temperature control**	Electro-mechanical
Cooking time setting	Start and Stop	**Circular heating element - Power**	2000 W
Door opening	Side opening		

Options Main Oven

Timer	Yes	**Minimum Temperature**	50 °C
End of cooking acoustic alarm	Yes	**Maximum temperature**	245 °C

Second Oven Technical Features



Fan number	1	**Full glass inner door**	Yes
Net volume of the second cavity	62 litres	**No. total door glasses**	2
Gross volume, 2nd cavity	69 l	**No. thermo-reflective door glasses**	1
Cavity material	Easy clean enamel	**Safety Thermostat**	Yes
Shelf positions	9	**Cooling system**	Tangential
Type of shelves	Metal racks	**Usable cavity space dimensions (HxWxD)**	605x275x370 mm
Door opening	Side opening	**Temperature control**	Electro-mechanical
Removable door	Yes	**Circular heating element - Power**	2500 W

Options Auxiliary Oven

Minimum Temperature	50 °C	**Maximum temperature**	245 °C

Third Oven Technical Features



Net volume, 3rd cavity	35 l	**No. total door glasses**	3
Gross volume, 3rd cavity	41 l	**No. of thermo-reflective door glasses**	1
Cavity material	Easy clean enamel	**Safety Thermostat**	Yes
Shelf positions	2	**Cooling system**	Tangential
Type of shelves	Metal racks	**Usable cavity space dimensions (HxWxD)**	169x440x443 mm
No. of lights	1	**Temperature control**	Electro-mechanical
Door opening	Flap down	**Large grill - Power**	2700 W
Removable door	Yes	**Grill type**	Electric
Full glass inner door	Yes	**Tilting grill**	Yes
Removable inner door	Yes		

Options Third Oven

Minimum Temperature	50 °C	**Maximum temperature**	260 °C

Accessories included for Main Oven & Hob

Chrome shelf with back and side stop	1	**40mm deep tray**	1

Accessories included for Secondary Oven

Chrome shelf with back stop	3

Electrical Connection

Max Power Draw	7600 W	**Additional connection modalities**	Yes, Double and Three Phase
Current	33 A	**Frequency**	50/60 Hz
Voltage	220-240 V	**Terminal block**	5 poles
Voltage 2 (V)	380-415 V	**Plug**	No
Cable testing	Yes		

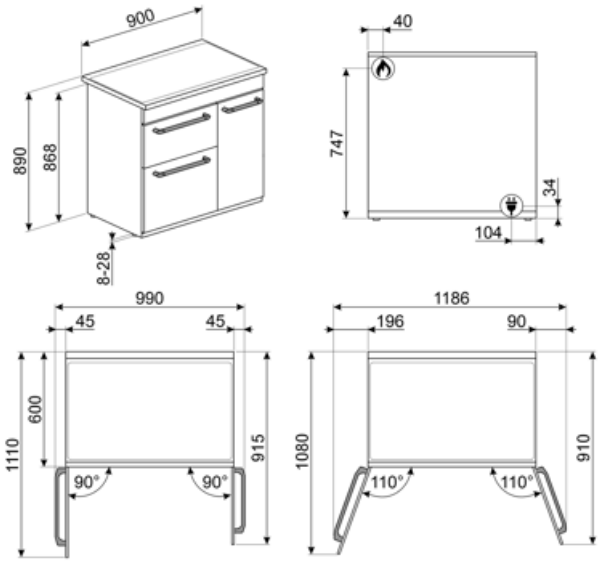

Compatible Accessories



AIRFRY2

Air fryer tray. Ideal for recreating traditional frying in the oven, but with fewer calories and less fat. It allows you to cook quickly and simply dishes such as French fries, fried vegetables and fish, ensuring perfect browning and crispiness.



BN620-1

Enamelled tray, 20mm deep



BNP608T

Teflon-coated tray, 8mm depth, to be placed on the grid



GTP

Partially extractable telescopic guides (1 level) Extraction: 300 mm Material: Stainless steel AISI 430 polished



KIT90N9

Splashback 90 cm, black, for BU & BM cookers



PALPZ

Pizza shovel with fold away handle width: 315mm length : 325mm

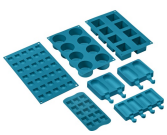

SMOLD

Set of 7 silicone moulds for ice creams, ice lollies, pralines, ice cubes or to portion food. Usable from -60°C to +230°C



BBQ

Double sided plate BBQ. Suitable for recreating succulent and crispy dishes in the oven with the typical taste of grilled cooking. The ribbed side is particularly suitable for meats and cheeses. The smooth side for fish, seafood and vegetables.



BN640

Enamelled tray, 40mm deep



GRM

Gas hobs moka support



GTT

Totally extractable telescopic guides (1 level) Extraction: 433 mm Material: Stainless steel AISI 430 polished



KITH93

Height extension kit (950 mm), suitable for TR93 cookers



SFLK1

Child lock



WOKGHU

Cast-Iron WOK Support

Symbols glossary



A: Product drying performance, measured from A+++ to D / G depending on the product family



B: Product energy rating, measured from A+++ to D / G depending on the product family.



Heavy duty cast iron pan stands: for maximum stability and strength.



Installation in column: Installation in column



Air cooling system: to ensure a safe surface temperatures.



Double glazed doors: Number of glazed doors.



Triple glazed doors: Number of glazed doors.



Enamel interior: The enamel interior of all Smeg ovens have a special antacid lining which helps keep the interior clean by reducing the amount of cooking grease adhering to it.



Circulaire: The combination of the fan and circular element around it gives a hot air cooking method. This provides many benefits including no preheat if cook time is more than 20 minutes, no flavour transfer when cooking different foods at the same time, less energy, and shorter cook times. Good for all types of food.



Grill element: Using of grill gives excellent results when cooking meat of medium and small portions, especially when combined with a rotisserie (where possible). Also ideal for cooking sausages and bacon.



All glass inner door: All glass inner door, a single flat surface which is simple to keep clean.



The inner door glass: can be removed with a few quick movements for cleaning.



Side lights: Two opposing side lights increase visibility inside the oven.



The oven cavity has 2 different cooking levels.



The oven cavity has 4 different cooking levels.



The oven cavity has 9 different cooking levels.



Electronic control: Allows you to maintain temperature inside the oven with the precision 2-3 ° C. This enables to cook meals that are very sensitive to temperature changes, such as cakes, souffles, puddings.



Tilting grill: the tilting grill can be easily unhooked to move the heating element and clean the roof of the appliance in one simple step.



Ultra rapid burners: Powerful ultra rapid burners offer up to 5kw of power.



The capacity indicates the amount of usable space in the oven cavity in litres.



The capacity indicates the amount of usable space in the oven cavity in litres.



The capacity indicates the amount of usable space in the oven cavity in litres.



The touch timer display or DigiScreen guarantees simple functionality. They display the time, set programmed cooking and the minute minder timer.



Knobs control

Benefit

Gas hob

Gas provides constant control of the heat source, with an immediate change in temperature

Equipped with a thermocouple, the gas supply is cut off if the flame is extinguished for greater safety

Ever Clean Enamel

Easy oven cleaning thanks to the special antacid lining which helps to reduce the amount of dirt adhering to the surface.

Touch control

Easy and intuitive timer setting with a single touch

Circulaire

The best cooking performances guaranteed by ventilated circular flow.

Multiple fans and heating elements guarantee the perfect aerodynamic heat flow, allowing homogeneous and quicker cooking inside the cavity.

Multilevel cooking

Several cooking levels allow maximum flexibility of use

Multilevel halogen light

Internal halogen lighting on different levels guarantees excellent visibility

Removalble inner glass

Internal door glasses are easily removable for complete cleaning

Tangential cooling

New cooling system with tangential fan and airflow from the door to the splashback

Cold door

During any function, the external door glass is cold, avoiding any risk of burns

AirFry (AIRFRY optional accessory)

Lighter and tastier food thanks to airfry basket

BBQ (optional accessory)

Barbeque cooking directly in the oven with the double-sided grill

Pizza stone (optional accessory)

Baking with refractory stone for soft and crispy pizza and yeast products (STONE optional accessory)

Adjustable height

Cooker top flushed with the working area thanks to adjustable feet

Isothermic Cavity

The best cooking performance at the highest energy efficiency

Single turbine

The oven has a fan equipped with a circular heating element allowing cooking with rotating heat