DF344AX



Product Family	Dishwashers
Commercial width	60 cm
Commercial height	85 cm
Installation	Free-standing
N° baskets	3, FlexiDuo
Motor	Inverter 2.0
EAN code	8017709351731

Programs

N. of programmes	10+1	**Auto sensor 45-65**	Yes
Washing temperatures	38, 45, 50, 55, 65, 70, 75 °C	**Mix**	Yes
Soak	Yes	**Quiet (-2 dB)**	Yes
Express 27'	Yes	**Intense**	Yes
Crystal	Yes	**Self clean**	Yes
Full express - 60 minutes	Yes	**Hygiene 99,9%**	Yes
ECO	Yes		

Options

Dry Assist option		**1/2 load FlexiZone option**	Yes
Dry Assist+ option	Yes		
Delay timer option	Up to 24 hours	**Special programs option**	Yes

Baskets

Basket colour	Grey	**Largest loadable dish in upper basket**	19,0 cm
Basket components colour	Grey	**Lower Basket**	With 4 foldable racks
Handle	In plastic on upper and lower basket	**Lower basket with anti-drip inserts**	Yes

Upper Basket	With 3 foldable racks	**Largest loadable dish in lower basket**	30,0 cm
Glass holder	Yes		
Height adjustment of the upper basket	On three levels (5 cm)	**Colour Inner Components**	Blue
Sliding Guides Extra Glide	Yes	**Cutlery basket**	Yes

Technical Features



Width (mm)	598 mm	**Water softener**	With electronic setting
Depth (mm)	600 mm	**Turbidity sensor Aquatest**	Yes
Display type	LED (external)	**Flood protection system**	Total Acquastop
Product Height (mm)	848 mm	**Water supply**	Single; cold/hot water max. 60°C - energysave with hot water up to 35%
Controls	Electronic	**Max water hardness**	100°fH;58°dH
Display	Delayed start, Programme time indicator, Time to end indication	**Drying system**	Natural condenser drying, with Dry Assist + automatic door opening system at the end of the cycle
Programme graphics	Symbols and printed key	**Steam protection**	In plastic
On/off indicator	Yes	**Tub material**	Stainless steel
Salt light indicator	Light	**Filter**	Stainless steel
Rinse aid indicator	Light	**Concealed heating element**	Yes
Progress indicator	Yes	**Hinges**	Self balancing with fixed hinges
End of cycle indicator	On display, with acoustic signal	**Adjustable feet**	Just for levelling
Auto switch-off	Yes	**Back cover**	Yes, with covered counterweight
Washing system	Planetarium	**Depth of dishwasher with open door (mm)**	1168 mm
Third spray arm	Single	**Removable top**	Yes, with optional KIT

Performance / Energy Label - Reg. 2019



Energy Efficiency Class	A	**Programme duration**	4:35 h:min
Energy consumption [per 100 cycles, based on the eco programme]	54 kWh	**Airborne acoustical noise emissions**	43 dB(A) re 1 pW
Rated capacity (ps)	14	**Airborne acoustical noise emission class**	B
Water consumption [per cycle]	10,5 litres	**Energy efficiency Index (EEI)**	31,8

Electrical Connection

Connected power	1800 W	**Type of connection**	Single-phase

Current	13 A	**Power supply cable length**	140 cm
Voltage	220-240 V	**Plug**	(G) UK e Singapore
Frequency (Hz)	50 Hz		

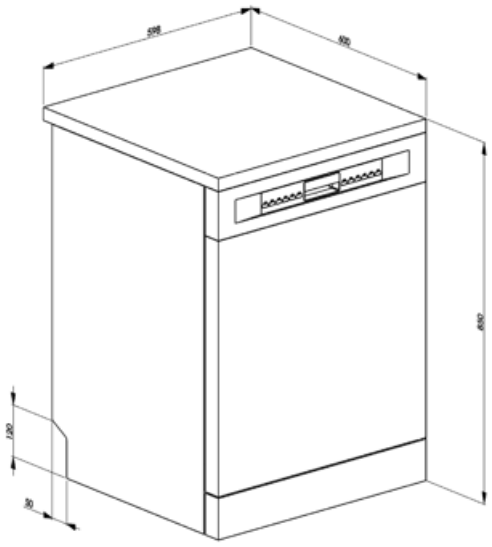

Compatible Accessories

KITGH

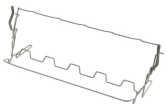

Kit glass holder. It has to be fitted on the first basket but only if there are foldable racks

KITINC

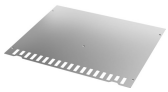

KITPLV2



Kit extension for dishwasher and washing machine: lenght mt. 2

Symbols glossary



The Aquatest sensor is an electronic sensor that measures the degree of water transparency at the end of the initial soaking phase. ased on the values measured, the sensor sets the most suitable programme, thus obtaining the best washing results with the minimum amount of water.



Delay Timer: Option to postpone the start of the desired programme by up to 24 hours in order to programme the dishwasher to run at the desired time.



FlexiDuo: The FlexiDuo 3rd cutlery basket allows you to arrange cutlery or small cups, ladles, or bulky utensils however you like: it consists of two separate and moveable modules.



The ExtraGlide guides system makes the second basket run even smoother and softer. It facilitates movement even when fully loaded, and thanks to the increased excursion, facilitates the insertion of dishes into the basket.



The Planetarium washing system, with high rotations per minute, guarantees complete coverage of the tank, thanks to the simultaneous rotation of base and sprayers, and excellent washing results.



Crystals: The Crystals programme is dedicated to delicate dishes such as glasses and china.



Mix: The Mix programme is suitable for mixed crockery and everyday pots and pans, without any particular incrustation.



Express 27': The Express 27' programme is a quick wash cycle, at low temperatures, for lightly soiled dishes.



14 place settings: Number of place settings.



System WaterSave ensures the best washing results with minimal water consumption depending on the model of dishwasher.



To improve the drying of dishes without leaving stains.



LED display: to show programmes, functions and options selected and the time to the end of the cycle.



FlexiZone: The ½ load flexizone allows you to wash a reduced load saving energy, water and time and there are no restrictions on where the items are placed.



Noise Level: Excellent insulation and special devices keep noise to a minimum.



Auto 45°- 65°: The auto programme regulates the length of a cycle depending on the need for a pre-wash and the number of rinses required.



Eco: Eco, this economic wash programme uses a low amount of water and energy in order to provide the most environmentally friendly cleaning option.



Soak programme: The soak programme provides a rinse to prevent dirt from drying.



Ultraclean: The Ultraclean option performs a final rinse at a high temperature of 70°c eliminating virtually all bacteria.



Total Acquastop: In addition to the partial Acquastop protection present in all Smeg dishwashers, some models have an electronic device fitted to the water intake hose, which monitors water levels in the machine, detects leaks in the hose and switches off the water supply immediately when necessary.



Quick wash cycle for normally soiled mixed loads such as dishes and pans, even with dried-on residues. Dishes are washed and dried in 60 minutes.

Dishwasher cleaning cycle. The cycle should be started with the machine empty, without dishes. It is recommended to run the program every 2-3 months, using special dishwasher detergents.

Allows you to enable additional programs when selected together with any wash cycle.

Energy efficiency class A

The work aimed at continuous improvement has allowed the creation of the second generation of the Inverter motor 2.0, characterised by greater efficiency and durability over time, which allows very high performance and a lower energy consumption and noise level.

SILENT: Wash cycle suitable for normally soiled dishes, even with dried-on residues. Ensures maximum noise reduction and is therefore ideal if you wish to run it during the night.

The Dry Assist + option, in addition to saving energy, ensures perfect drying of the dishes by opening the door automatically at the end of the washing cycle.

HYGIENE 99.9% High-temperature washing programme. The 75° rinse guarantees the removal of 99.9% of germs and bacteria.