DFFABCR



Product Family	Dishwashers
Width	60 cm
Commercial height	85 cm
Installation	Free-standing
N° baskets	3, FlexiDuo
Motor	Inverter 2.0
EAN code	8017709307875

Programmes

No. of programmes	10+1
Washing temperatures	38, 45, 50, 55, 65, 70, 75 °C
Soak	Yes
Express 27'	Yes
Crystal	Yes
Full express - 60 minutes	Yes
ECO	Yes
Auto sensor 45-65	Yes
Mix	Yes
Quiet (-2 dB)	Yes
Intense	Yes
Self clean	Yes
Hygiene 99,9%	Yes

Options

Dry Assist+ option	Yes
Delay timer option	Up to 9 hours, with automatic soak
1/2 load FlexiZone option (varied distribution)	Yes
Special programs option	Yes

Baskets

Basket colour	Grey
Basket components colour	Grey
Largest loadable dish in upper basket	19,0 cm
Lower Basket	With 4 foldable racks

Handle	In plastic on upper and lower basket
Upper Basket	With 3 foldable racks
Glass holder	Yes
Height adjustment of the upper basket	On three levels
Upper basket with EasyGlide System	Yes
Lower basket with anti-drip inserts	Yes
Largest loadable dish in lower basket	30,0 cm
Colour Inner Components	Cup shelves, Handle, Anti drop inserts, Cutlery basket: same colour of Dishwasher
Cutlery basket	Yes

Technical Features



Width (mm)	598 mm
Depth (mm)	627 mm
Display type	1 digit
Product Height (mm)	885 mm
Controls	Electronic
Display	Delayed start
Programme graphics	Symbols and label
On/off indicator	Yes
Salt light indicator	Light
Rinse aid indicator	Light
End of cycle indicator	Acoustic signal
Washing system	Planetarium
Third spray arm	Single
Water softener	With electronic setting
Turbidity sensor Aquatest	Yes
Flood protection system	Total Acquastop
Water supply	Single; cold/hot water max. 60°C - energysave with hot water up to 35%
Max water hardness	100°fH;58°dH
Drying system	Natural condenser drying, with Dry Assist + automatic door opening system at the end of the cycle
Tank material	Stainless steel
Filter	Stainless steel
Concealed heating element	Yes
Hinges	Self balancing with fixed hinges
Adjustable feet	Just for levelling
Back cover	Yes
Depth of dishwasher with open door (mm)	1171 mm
Top cover	In plastic

Performance / Energy Label

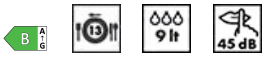

Energy Efficiency Class (Washing cycle)	B
Energy consumption [per 100 cycles, based on the eco programme]	63 kWh
Rated capacity (ps)	13
Water consumption [per cycle]	9.0 litres
Programme duration	4:25 h:min
Airborne acoustical noise emissions (spinning phase)	45 dB(A) re 1 pW
Airborne acoustical noise emission class	C
Energy efficiency Index (EEI) (Washing cycle)	37.9

Electrical Connection

Connected power	1800 W	**Type of connection**	Single-phase
Current	13 A	**Power supply cable length**	140 cm
Voltage	220-240 V		
Frequency (Hz)	50 Hz	**Plug**	(G) UK e Singapore

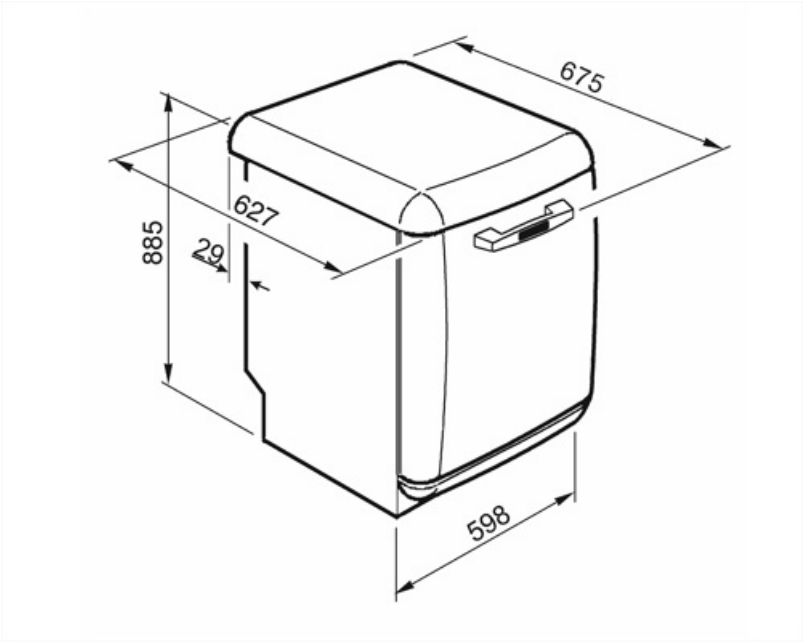

Compatible Accessories

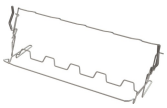

KITGH

Kit glass holder. It has to be fitted on the first basket but only if there are foldable racks



KITPLV2

Kit extension for dishwasher and washing machine: length mt. 2

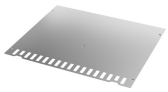

KITINC

a steel bar fitted on the top will block the dishwasher at the top.

Alternative products



DFFABBL

Colour: Black

Symbols glossary



Aquatest measures the clarity of the water during an auto program, and automatically ensures the minimum consumption of water and energy.



Energy efficiency class B



The Dry Assist + option, in addition to saving energy, ensures perfect drying of the dishes by opening the door automatically at the end of the wash c



FlexiDuo: The FlexiDuo 3rd cutlery basket allows you to arrange cutlery or small cups, ladles, or bulky utensils however you like: it consists of two separate and moveable modules.



The work aimed at continuous improvement has allowed the creation of the second generation of the Inverter motor 2.0, characterised by greater efficiency and durability over time, which allows very high performance and a lower energy consumption and noise level.



PLANETARIUM_WASHING_SYSTEM_72dpi



Crystals: The Crystals programme is dedicated to delicate dishes such as glasses and china.



Quick wash cycle for normally soiled mixed loads such as dishes and pans, even with dried-on residues. Dishes are washed and dried in 60 minutes.



Dishwasher cleaning cycle. The cycle should be started with the machine empty, without dishes. It is recommended to run the program every 2-3 months, using special dishwasher detergents.



Allows you to enable additional programs when selected together with any wash cycle.



Rapid 27 Mins: The rapid 27 mins quick program takes just 27 minutes to wash a load.



Ultraclean: The Ultraclean option performs a final rinse at a high temperature of 70°c eliminating virtually all bacteria.



Anti-drip: Some models of dishwashers are equipped with special polymer nozzles anti-drip, that improve the process of drying.



Delay Timer: The delay timer can postpone the start of the program by up to 24 hours.



EasyGlide: Convenient EasyGlide system for easy unloading of the appliance that allows reaching maximum flexibility of load of the machine.



FlexiZone: The ½ load flexizone allows you to wash a reduced load saving energy, water and time and there are no restrictions on where the items are placed.



Noise Level: Excellent insulation and special devices keep noise to a minimum.



Auto 45°- 65°: The auto programme regulates the length of a cycle depending on the need for a pre-wash and the number of rinses required.



Eco: Eco, this economic wash programme uses a low amount of water and energy in order to provide the most environmentally friendly cleaning option.



Normal programme: The normal programme is suitable for normal degrees of dirt for everyday use.



SILENT: Wash cycle suitable for normally soiled dishes, even with dried-on residues. Ensures maximum noise reduction and is therefore ideal if you wish to run it during the night.



Soak programme: The soak programme provides a rinse to prevent dirt from drying.



HYGIENE 99.9% High-temperature washing programme. The 75° rinse guarantees the removal of 99.9% of germs and bacteria, making it ideal for sanitising



The symbols show the number of plate settings of the dishwasher.



Total Acquastop: In addition to the partial Acquastop protection present in all Smeg dishwashers, some models have an electronic device fitted to the water intake hose, which monitors water levels in the machine, detects leaks in the hose and switches off the water supply immediately when necessary.



System WaterSave ensures the best washing results with minimal water consumption depending on the model of dishwasher.