DHT83LIN

EAN Code	8017709209513
Product Family	Tumble dryer
Commercial width	60 cm
Installation	Free-standing
Drying system	Heat pump condenser
Load type	Frontal



Aesthetics

Front panel colour	Silver	**Door colour**	Silver, with inner White frame
LED/display colour	White	**Door handle color**	Silver
Function buttons colour	Black	**Cabinet colour**	White
Control knob colour	Silver/Chrome		

Programs

Controls	Electronics
Programme graphics	Written in EN
No. of programmes	16
Multilanguage clip system	Yes
Language clip	

Written in DE	Written in FR	Written in NL
Written in PT	Written in SE	Written in DA
Written in NO	Written in FI	Written in PL
Written in UA		

Programmes

- Cotton Iron Dry
- Cotton Extra Dry
- Synthetic Iron Dry
- Synthetic Cupboard Dry
- Delicates
- Refresh
- Baby
- Daily
- Cotton Cupboard Dry
- Quick 49 min
- Jeans
- Mix
- Shirts 30 min
- Timed Programmes
- Night
- Wool

Special programmes

- Wool
- Refresh
- Quick 49 min
- Delicates
- Baby

Display

Delay start | Residual time indicator | Visualisation of the selected options

Display type	LCD DISPLAY
Programme progress indicator	✓
End of cycle indicator	END
Clean filter indicator	Yes
Condenser container full indicator	Yes

Technical Features

Type of motor	Brushless/Inverter	**Transparent door**	Yes
Functioning	Electronic control	**Door size**	40 cm
Humidity sensor	Yes	**Max. door opening angle**	178 °
Time drying selection	From 10 to 160 min	**Door hinges**	Right
Dying temperature regulation	Yes	**Reversible door**	Yes
Cooling down phase	Yes	**Child lock (programme set lock)**	Yes
Anti-iron phase	Yes	**Water condenser position**	At the top
Alternate drum rotation	Yes	**Heating pump system**	Yes
Internal light	Yes	**Type of cooling gas**	R134a
Condenser filter	Yes	**Amount of cooling gas in kg**	0,52
Fluff filter	Yes		
Drum material	Stainless steel		
Drum volume	118 l		

Condenser water drain hose	Yes
Column installation, with compatible washing-machine	With stacking kit, available as optional accessory
Optional	KITSPF-1 - Stacking kit (54 cm)

Performance / Energy label – Reg 2023



Load capacity (cotton)	8 kg	**Time of the standard cotton program at full load**	174 min
Noise level for the standard cotton programme at full load	65 dB(A) re 1 pW	**Time of the standard cotton program at partial load**	108 min

Electrical Connection

Connected power	800 W	**Frequency (Hz)**	50 Hz
Current	10 A	**Power supply cable length**	150 cm
Voltage (V)	230-240 V		

Logistic Information

Width (mm)	595 mm	**Product Height (mm)**	846 mm
Depth (mm)	609 mm		

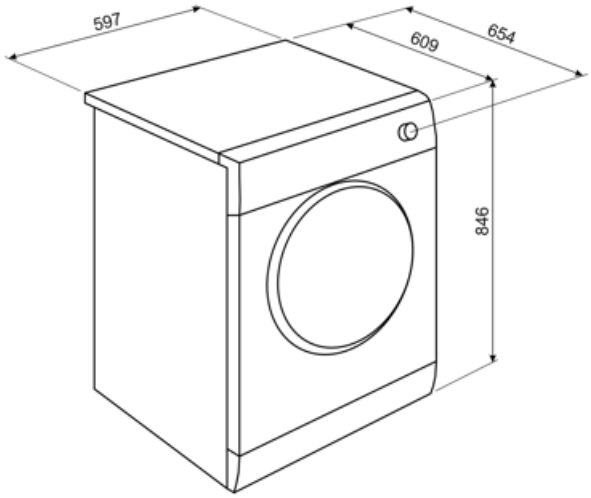

Symbols glossary



Easy Iron: this is an option which can be selected to ensure the finished laundry is left with less creases to make ironing easier.



A+++: Appliances with this symbol can reduce energy consumption by a further 30% from the standard A energy rating.



LCD display: to optimize performance and simplify the use of the appliance.



This shows the amount of laundry that can be inserted into the tumble dryer in KG.



End: Show the stage at which the program is in progress: the program has finished.



Smeg's evolution towards more intelligent and eco-friendly models has led to the choice of Inverter technology, which significantly reduces consumption.



Baby: programme designed for washing children’s clothing, underwear, and delicate items. It removes bacteria, allergens, and detergent residues, ensuring optimal hygiene, protection of delicate fibres, and sterilization of garments through the use of high temperatures.



Specific for child garments



Extra drying for cotton



Specific for daily drying of cotton or synthetic garments



Special program for garments / fabrics, such as children's clothes, which require sanitized and delicate washing.



For synthetic fabrics without pigments and for cotton



Drying cotton garments centrifuged at high speed in just 49 minutes



For synthetic fabrics, ironing in not required



Child lock: some models are fitted with a device to lock the programme/cycle so it cannot be accidentally changed.



Delay timer: can be set to run the programme at a convenient time or to take advantage of off-peak energy periods.



40 cm: Large loading hatch of 40 cm in diameter, makes laundry loading and unloading easier and faster with maximum ease of use.



Humidity sensor: allows to adjust dryer to obtain the desired drying level (Iron dry, Cupboard dry and Extra dry), saving time and reducing energy consumption. In addition, manual adjusting allows you to program drying time according to your preferences.



Internal lights: help to illuminate the inside of the drum.



Noise Level: Excellent insulation and special devices keep noise to a minimum.



Delicate: Clothing such as underwear, hosiery and luxury fabrics should be dried on the delicate cycle to help extend the life of the clothing.



Cupboard drying for cotton garments



Drying of cotton garments that need to be ironed



Delicate garments that allows the drying



For high speed centrifuged jeans



The noise level is reduced at the lowest level



Gentle drying for shirts in 30 min. avoiding the formation of folds



For synthetic fabrics, ironing is required



Selection of timed cycles at low temperatures.



To dry wool clohtes placed on a suitable basket



Super fast 49 min: a programme designed to wash small amounts of laundry fast, ideal for washing lightly soiled garments.



Refresh: an ideal program to refresh the garments that have been kept for a long time indoors and eliminate unpleasant odors, without having to wash.



Wool: this programme for wool or delicate fabrics uses slower rotations of the drum to ensure the utmost care for clothing.



Shows the phase of program: Shows the phase in which the program is being.