# DI322BQLH



| | |
|---|---|
| **Product Family** | Dishwashers |
| **Commercial width** | 60 cm |
| **Commercial height** | 86 cm |
| **Installation** | Fully-integrated built-in |
| **Kitchen panel** | Not supplied |
| **N° baskets** | 3, FlexiDuo |
| **Motor** | Inverter 2.0 |
| **EAN code** | 8017709307851 |

## Programs

| | | | |
|---|---|---|---|
| **N. of programmes** | 10+1 | **Mix** | Yes |
| **Washing temperatures** | 38, 45, 50, 55, 65, 70, 75 °C | **Quiet (-2 dB)** | Yes |
| **Soak** | Yes | **Intense** | Yes |
| **Express 27'** | Yes | **Self clean** | Yes |
| **Crystal** | Yes | **Hygiene 99,9%** | Yes |
| **Full express - 60 minutes** | Yes | **Delicate** | Yes |
| **ECO** | Yes | | |

## Options

| | | | |
|---|---|---|---|
| **Dry Assist+ option** | Yes | **1/2 load FlexiZone option** | Yes |
| **Delay timer option** | Up to 24 hours | **Special programs option** | Yes |

## Baskets

| | | | |
|---|---|---|---|
| **Basket colour** | Grey | **Upper basket with EasyGlide System** | Yes |
| **Basket components colour** | Grey | **Largest loadable dish in upper basket** | 19,0 cm |
| **Handle** | In plastic on upper and lower basket | **Lower Basket** | With 4 foldable racks |

| | |
|---|---|
| **Upper Basket** | With 1 foldable rack |
| **Glass holder** | Yes |
| **Height adjustment of the upper basket** | On three levels (5 cm) |
| **Lower basket with anti-drip inserts** | Yes |
| **Largest loadable dish in lower basket** | 35,0 cm |
| **Colour Inner Components** | Blue |

## Technical Features




| | |
|---|---|
| **Width (mm)** | 598 mm |
| **Depth (mm)** | 550 mm |
| **Display type** | LED display (3 digit) |
| **Product Height (mm)** | 858 mm |
| **Controls** | Electronic |
| **Display** | Delayed start, Programme time indicator |
| **Programme graphics** | Symbols and label |
| **On/off indicator** | Yes |
| **Salt light indicator** | Light |
| **Rinse aid indicator** | Light |
| **End of cycle indicator** | ActiveLight |
| **Auto switch-off** | Yes |
| **Washing system** | Planetarium |
| **Third spray arm** | Single |
| **Water softener** | With electronic setting |
| **Flood protection system** | Total Acquastop |
| **Water supply** | Single; cold/hot water max. 60°C - energysave with hot water up to 35% |
| **Max water hardness** | 100°fH;58°dH |
| **Drying system** | Natural condenser drying, with Dry Assist + automatic door opening system at the end of the cycle |
| **Steam protection** | In plastic |
| **Tub material** | Stainless steel |
| **Filter** | Stainless steel |
| **Concealed heating element** | Yes |
| **Hinges** | Self balancing, Sliding, FLEXIFIT |
| **Min. and max. frontal panel weight** | 2,5 - 10 kg |
| **Min. and max plinth height** | 50 - 215 mm |
| **Adjustable feet** | 7 cm, from 860 to 930 mm |
| **Back cover** | Yes |
| **Depth of dishwasher with open door (mm)** | 1186 mm |
| **Back feet adjustable from front** | Yes |
| **Top cover** | In plastic |

## Performance / Energy Label - Reg. 2019

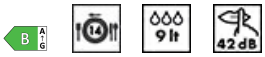


| | |
|---|---|
| **Energy Efficiency Class** | B |
| **Energy consumption [per 100 cycles, based on the eco programme]** | 64 kWh |
| **Rated capacity (ps)** | 14 |
| **Water consumption [per cycle]** | 9,0 litres |
| **Programme duration** | 4:25 h:min |
| **Airborne acoustical noise emissions** | 42 dB(A) re 1 pW |
| **Airborne acoustical noise emission class** | B |
| **Energy efficiency Index (EEI)** | 37,8 |

## Electrical Connection

| | | | |
|---|---|---|---|
| **Connected power** | 1800 W | **Type of connection** | Single-phase |
| **Current** | 13 A | **Power supply cable length** | 140 cm |
| **Voltage** | 220-240 V | | |
| **Frequency (Hz)** | 50 Hz | **Plug** | (G) UK e Singapore |

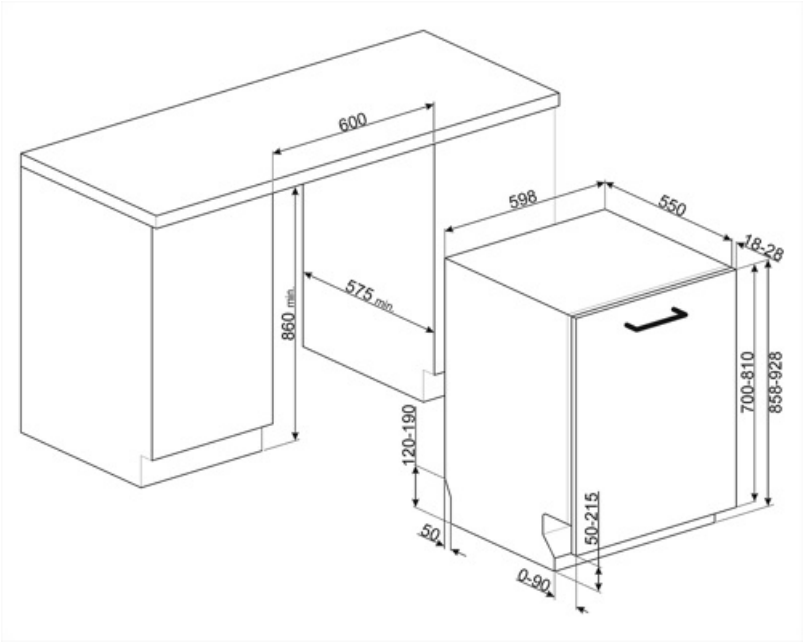

## Compatible Accessories



**KIT86CX-1**

Door kit, stainless steel, Canali handle, fully integrated dishwasher h.86 cm Compatible with models with Flexifit and fixed fulcrum hinges.



**KIT86SPRAN**



**KIT86SPRMW**



**KIT86SPRX**

**KITFLEXI**



Kit for 60cm dishwashers with FlexiFit hinges for door panel weight >11 kg (max 15 kg 82 cm and 13,5 kg 86 cm)

**KITGH**

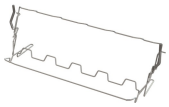

Kit glass holder. It has to be fitted on the first basket but only if there are foldable racks

**KITPL60B**



Toekick Kit in White colour with adjustable height and deepness. Can be installed over all the fully integrated and underbench models with variable fulcrum or flexifit hinges.

**KITPL60N**



Toekick Kit in Black colour with adjustable height and deepness. Can be installed over all the fully integrated and underbench models with variable fulcrum or flexifit hinges.

**KITPL60X**



Toekick Kit in Stainless Steel with adjustable height and deepness. Can be fitted over all the fully integrated and underbench models with variable fulcrum or flexifit hinges.

**KITPLV2**



Kit extension for dishwasher and washing machine: lenght mt. 2

## Symbols glossary




Activelight is an led light which projects a red spot onto the floor beneath the dishwasher when the appliance is in use.




86 cm high



EasyGlide: Convenient EasyGlide system for easy unloading of the appliance that allows reaching maximum flexibility of load of the machine.




The FlexiFit hinges allow the kitchen panel to slide over the dishwasher door, allowing a minimum kitchen plinth height of 5 cm.




Noise Level: Excellent insulation and special devices keep noise to a minimum.




Crystals: The Crystals programme is dedicated to delicate dishes such as glasses and china.




Eco: Eco, this economic wash programme uses a low amount of water and energy in order to provide the most environmentally friendly cleaning option.



Soak programme: The soak programme provides a rinse to prevent dirt from drying.




Ultraclean: The Ultraclean option performs a final rinse at a high temperature of 70°c eliminating virtually all bacteria.



Total Acquastop: In addition to the partial Acquastop protection present in all Smeg dishwashers, some models have an electronic device fitted to the water intake hose, which monitors water levels in the machine, detects leaks in the hose and switches off the water supply immediately when necessary.




Quick wash cycle for normally soiled mixed loads such as dishes and pans, even with dried-on residues. Dishes are washed and dried in 60 minutes.



To improve the drying of dishes without leaving stains.



Delay Timer: Option to postpone the start of the desired programme by up to 24 hours in order to programme the dishwasher to run at the desired time.



FlexiDuo: The FlexiDuo 3rd cutlery basket allows you to arrange cutlery or small cups, ladles, or bulky utensils however you like: it consists of two separate and moveable modules.




FlexiZone: The ½ load flexizone allows you to wash a reduced load saving energy, water and time and there are no restrictions on where the items are placed.



The Planetarium washing system, with high rotations per minute, guarantees complete coverage of the tank, thanks to the simultaneous rotation of base and sprayers, and excellent washing results.




Delicate: Delicate washing program is designed for delicate dishes which are not heavily soiled.




Mix: The Mix programme is suitable for mixed crockery and everyday pots and pans, without any particular incrustation.




Express 27': The Express 27' programme is a quick wash cycle, at low temperatures, for lightly soiled dishes.




14 place settings: Number of place settings.




System WaterSave ensures the best washing results with minimal water consumption depending on the model of dishwasher.



Dishwasher cleaning cycle. The cycle should be started with the machine empty, without dishes. It is recommended to run the program every 2-3 months, using special dishwasher detergents.

SILENT: Wash cycle suitable for normally soiled dishes, even with dried-on residues. Ensures maximum noise reduction and is therefore ideal if you wish to run it during the night.

The Dry Assist + option, in addition to saving energy, ensures perfect drying of the dishes by opening the door automatically at the end of the washing cycle.

HYGIENE 99.9% High-temperature washing programme. The 75° rinse guarantees the removal of 99.9% of germs and bacteria.

Allows you to enable additional programs when selected together with any wash cycle.

Energy efficiency class B

The work aimed at continuous improvement has allowed the creation of the second generation of the Inverter motor 2.0, characterised by greater efficiency and durability over time, which allows very high performance and a lower energy consumption and noise level.