DOSF6390X



Category	Double in column
Product Family	Oven
Power supply	Electric
Heat source	ELECTRICITY
Heat source second cavity	ELECTRICITY
Cooking method	Thermo-ventilated
Cooking Method Secondary Oven	Static
Cleaning system	Ever Clean enamel
EAN code	8017709214203

Aesthetics

Aesthetic	Classica	**Serigraphy type**	Symbols
Colour	Stainless Steel	**Door**	With 2 horizontal strips
Finishing	Fingerproof	**Handle**	Classic
Design	Flat	**Handle Colour**	Inox
Material	Stainless steel	**Logo**	Embossed
Type of steel	Brushed	**Control knobs**	Classic
Glass Type	Eclipse	**Controls colour**	Steel effect
Serigraphy colour	Black		

Programs / Functions main oven

No. of cooking functions	9
Automatic programmes	20

Traditional cooking functions

- Static
- Fan assisted
- Circulaire
- Turbo
- Eco
- Large grill
- Fan grill (large)
- Base
- Fan assisted base

Other functions

- Defrost by time
- Defrost by weight
- Leavening
- Sabbath

Cleaning functions

Vapor Clean

Programs / Functions auxiliary oven

No. of functions Secondary oven	4

Traditional cooking functions, cavity 2

Static | Eco | Small grill | Large grill

Controls

Display name	CompactScreen	**Control setting**	Knobs
Display technology	LCD	**No. of controls**	4

Options

Time-setting options	Delay start and automatic end cooking	**Controls Lock / Child Safety**	Yes
Minute minder	Yes	**Showroom demo option**	Yes

Options Auxiliary Oven

Time-setting options	No delay options

Technical Features

Capacity (Lt)	70 l	**Heating suspended when door is opened**	Yes
Minimum Temperature	30 °C	**Door**	Fresh Touch
Maximum temperature	280 °C	**Removable door**	Yes
No. of shelves	5	**Full glass inner door**	Yes
No. of lights	1	**Removable inner door**	Yes
Light type	Halogen	**Total no. of door glasses**	3
Light Power	40 W	**Cooling system**	Tangential
Light when door is opened	Yes	**Cooling duct**	Double
Lower heating element power	1200 W	**Speed Reduction Cooling System**	Yes

Upper heating element - Power	1000 W
Grill element - power	1700 W
Large grill - Power	2700 W
Circular heating element - Power	2000 W
Usable cavity space dimensions (HxWxD)	316x444x425 mm
Temperature control	Electro-mechanical
Cavity material	Ever clean Enamel

Second Oven Technical Features



Minimum Temperature	50 °C
Maximum temperature	270 °C
No. of shelves	2
Tiliting grill	Yes
No. of lights	1
Light type	Halogen
Light Power	40 W
Bottom heating element power	1200 W
Upper heating element - Power	1000 W
Grill element - power	1700 W
Large grill - Power	2700 W
Removable door	Yes
Full glass inner door	Yes
Removable inner door	Yes
No. of total door glasses	3
No. of thermoreflecting door glasses	1
Usable cavity space dimensions (HxWxD)	169x440x443 mm

Performance / Energy Label



Energy efficiency class	A
Net volume of the cavity	70 l
Energy consumption per cycle in conventional mode	0.99 kWh
Energy consumption in conventional mode	3.56 MJ
Energy consumption in forced air convection	2.88 MJ
Energy consumption per cycle in fan-forced convection	0.80 kWh
Number of cavities	2
Energy efficiency index	95.2 %
Energy Efficiency Index, second cavity	105.7 %

Performance /Energy Label - Second Cavity



Energy efficiency class, second cavity	A
Energy efficiency class, second cavity	A
Energy consumption per cycle in conventional mode, second cavity	0.74 kWh
Consumo di energia per ciclo in convezione naturale, seconda cavità	2.66 MJ
Net volume of the second cavity	35 l
Gross volume of second cavity	41 l
Cavity type EN 50304 second oven	small

Accessories included

Rack with back and side stop	2	**Insert gird**	2
Enamelled deep tray (40mm)	2	**Catalytic Panels**	Yes

Electrical Connection

Voltage	220-240 V	**Voltage 2**	380-415 V
Plug	Not present	**Frequency (Hz)**	50/60 Hz
Current	26 A	**Power supply cable length**	150 cm
Nominal power	5900 W		

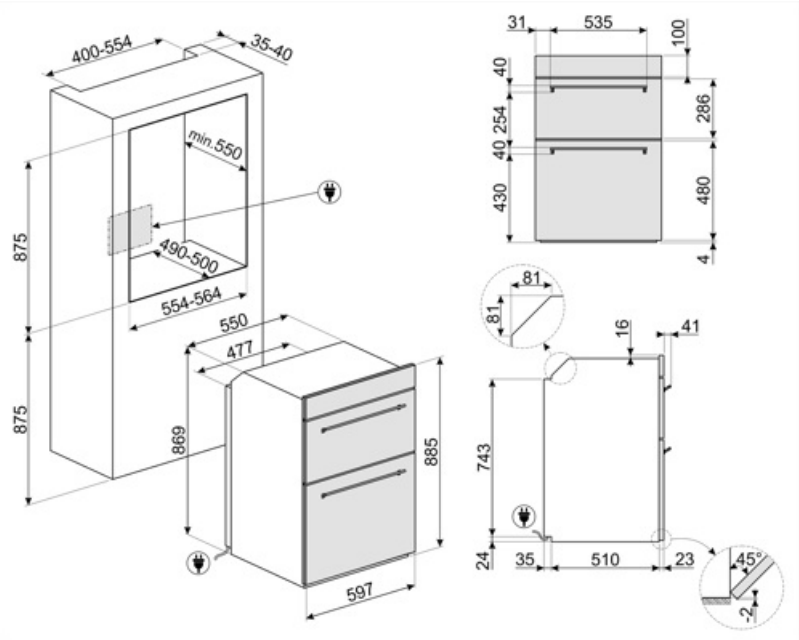

Compatible Accessories



GTP

Partially extractable telescopic guides (1 level), suitable for traditional ovens. Made in stainless steel, they guarantee stability and facilitate the smooth extraction of the trays.



GTT

Totally extractable telescopic guides (1 level), suitable for traditional ovens. Made in stainless steel, they guarantee stability and facilitate the smooth extraction of the trays.

Symbols glossary



Child lock: some models are fitted with a device to lock the programme/cycle so it cannot be accidentally changed.



Air cooling system: to ensure a safe surface temperatures.



Defrost by weight: Automatic defrost function. You choose the type of food to defrost from the available categories (MEAT - FISH - BREAD - DESSERTS). After entering the weight of the food, the oven automatically defines the time required for proper defrosting.



Electric



Fingerprint proof stainless steel: Fingerprint proof stainless steel keeps stainless steel looking as good as new.



Fan assisted base: the mix of fan and lower heating element alone allows to finish cooking foods already cooked on the surface but not internally more quickly. This system is recommended to finish cooking foods that are already well cooked on the surface, but not internally, which therefore require a moderate higher heat. Ideal for any type of food.



Static: Traditional cooking suitable for the preparation of one dish at a time. The fan is not active and the heat comes from below and from above at the same time. Static cooking is slower and more delicate, ideal in order to get well cooked and dry dishes even inside. Ideal for cooking all types of roasts, fatty meats, bread, filled cakes.



Energy efficiency class A



Defrost by time: Manual defrost function. At the end of the set duration, the function stops.



Triple glazed doors: Number of glazed doors.



Ever Clean Enamel: Ever Clean enamel is applied electrostatically, corner to corner and edge to edge to prevent cracking or cracks over time. It is a particular pyrolytic enamel, resistant to acids which, in addition to being pleasantly bright, promotes greater cleaning of the oven walls, thanks to its lower porosity. It is baked at over 850 °C and slowly polymerized at a scientifically determined rate to ensure uniform depth and strength. Ever Clean enamel creates an impeccable finish both on the inside of the oven and on the trays, making the surfaces of the oven incredibly easy to maintain over time as it reduces the adhesion of fat during cooking.



Fresh Touch: Most of Smeg ovens have a "cool door." Thanks to the combination of tangential cooling and internal heat-reflecting glasses, the temperature on the outer surface of the door is maintained below 50° C. In addition to providing safety, this system protects the sides of the furniture from overheating by the oven.



Fan assisted: Intense and homogeneous traditional cooking, also suitable for complex recipes. The fan is active and the heat comes from below and from above at the same time. Ventilated cooking ensures a faster and more homogeneous result, leaving fragrant foods outside and moister inside. Ideal for baked pasta, biscuits, roasts and cobblers.



Base: the heat comes only from the bottom of the cavity. The fan is not active. Ideal for sweet and savory pies, cobblers and pizzas. Designed to complete cooking and make food more crunchy. This symbol in gas ovens indicates the gas burner.

Circulaire: it is the perfect function for cooking all types of dishes in a more delicate way. The heat comes from the back of the oven and is distributed quickly and evenly. The fan is active. It is also ideal for cooking on multiple levels without mixing smells and flavors.

ECO: low energy consumption cooking: this function is particularly suitable for cooking on a single shelf with low energy consumption. It is recommended for all types of food except those that can generate a lot of moisture (for example vegetables). To achieve maximum energy savings and reduce time, it is recommended to put the food in the oven without preheating the cooking compartment.

ECO: low energy consumption cooking: this function is particularly suitable for cooking on a single shelf with low energy consumption. It is recommended for all types of food except those that can generate a lot of moisture (for example vegetables). To achieve maximum energy savings and reduce time, it is recommended to put the food in the oven without preheating the cooking compartment.

Half grill: For rapid cooking and browning of foods. Best results can be obtained by using the top shelf for small items, the lower shelves for larger ones, such as chops or sausages. For half grill heat is generated only at the centre of the element, so is ideal for smaller quantities.

Turbo: the heat comes from 3 directions: above, below and from the back of the oven. The fan is active. It allows quick cooking, even on several shelves without mixing the aromas. Ideal for large volumes or foods that require intense cooking.

The inner door glass: can be removed with a few quick movements for cleaning.

ECO-logic: option allows you to restrict the power limit of the appliance real energy saving.

SABBATH: function that allows to cook food respecting Judaism's day of rest provisions.

The oven cavity has 5 different cooking levels.

Vapor Clean: a simple cleaning function using steam to loosen deposits in the oven cavity.

The capacity indicates the amount of usable space in the oven cavity in litres.

ECO: low energy consumption cooking: this function is particularly suitable for cooking on a single shelf with low energy consumption. It is recommended for all types of food except those that can generate a lot of moisture (for example vegetables). To achieve maximum energy savings and reduce time, it is recommended to put the food in the oven without preheating the cooking compartment.

Grill: Very intense heat coming only from above from a double heating element. The fan is not active. Provides excellent grilling and gratinating results. Used at the end of cooking, it gives a uniform browning to dishes.

Fan grill: very intense heat coming only from above from a double heating element. The fan is active. It allows the optimal grilling of thickest meats. Ideal for large cuts of meat.

All glass inner door: All glass inner door, a single flat surface which is simple to keep clean.

Side lights: Two opposing side lights increase visibility inside the oven.

Air at 40°C provides the perfect environment for proving yeast type dough mixes. Simply select the function and place dough in the cavity for allotted

The oven cavity has 2 different cooking levels.

Tilting grill: the tilting grill can be easily unhooked to move the heating element and clean the roof of the appliance in one simple step.

The capacity indicates the amount of usable space in the oven cavity in litres.

The capacity indicates the amount of usable space in the oven cavity in litres.



The capacity indicates the amount of usable space in the oven cavity in litres.



With a simple and intuitive interface, the COMPACTscreen provides a pleasant user experience, thanks to the interaction with the knobs.

Benefit (TT)

Removable internal glass

Easy cleaning of the oven door thanks to the removable glass

Ever Clean enamel

Facilitated cavity cleaning due to special pyrolytic enamel

Ever Clean enamel is applied electrostatically, corner to corner and edge to edge to prevent cracking or cracks over time.
It is a particular pyrolytic enamel, resistant to acids which, in addition to being pleasantly bright, promotes greater cleaning of the oven walls, thanks to its lower porosity.
It is baked at over 850 °C and slowly polymerized at a scientifically determined rate to ensure uniform depth and strength.
Ever Clean enamel creates an impeccable finish both on the inside of the oven and on the trays, making the surfaces of the oven incredibly easy to maintain over time as it reduces the adhesion of fat during cooking.