DW8600

Product Family	Dishwashers
Commercial height	STANDARD HEIGHT
Installation	Fully-integrated built-in
Kitchen panel	Not supplied
N° baskets	2
EAN code	8017709355234
UPC Code	812895027228



Programs

N. of programmes	8	**Super**	Yes
Washing temperatures	45, 50, 55, 65 °F	**Regular**	Yes
Light soiling	Yes	**Intensive 65°**	Yes
Delicate	Yes	**Intensive 70°**	
Extreme Wash	Yes	**Rinse**	Yes
Auto	Yes		

Options

Hi-Temp	Yes	**Delay timer option**	Up to 24 hours
Extra Fast	Yes	**Extra dry option**	Yes
Sanitize	Yes	**1/2 load FlexiZone option**	Yes
Silent	Yes	**Sanitizing option Hyclean**	Yes

Baskets

Basket colour	Grey	**Height adjustment of the upper basket**	On two levels (5cm)
Basket components colour	Grey	**Lower Basket**	With 2 foldable racks
Handle	In plastic on upper and lower basket	**Colour Inner Components**	Grey
Upper Basket	With 2 foldable racks	**Cutlery basket**	Yes

Technical Features

Width (mm)	23 9/16 "	**Turbidity sensor Aquatest**	Yes
Depth (mm)	23 13/16 "	**Flood protection system**	Single Acquastop
Display type	LED display (3 digit)	**Drying system**	Natural condenser drying
Product Height (mm)	33 7/8 "	**Tub material**	Stainless steel
Controls	Electronic	**Filter**	Stainless steel
Display	Delayed start, Programme time indicator	**Concealed heating element**	Yes
Programme graphics	Written in EN	**Can be installed in-column**	Yes
On/off indicator	Yes	**Adjustable feet**	5cm, from 820 to 870 mm
Rinse aid indicator	Light	**Back feet adjustable from front**	Yes
End of cycle indicator	On display, with acoustic signal	**Adjustable plinth**	By height
Washing system	Standard	**Energy Star**	Yes

Electrical Connection

Connected power	1400 W	**Type of connection**	Single-phase
Current	12 A	**Power supply cable length**	116 "
Voltage	120 V	**Plug**	Junction Box
Frequency (Hz)	60 Hz		

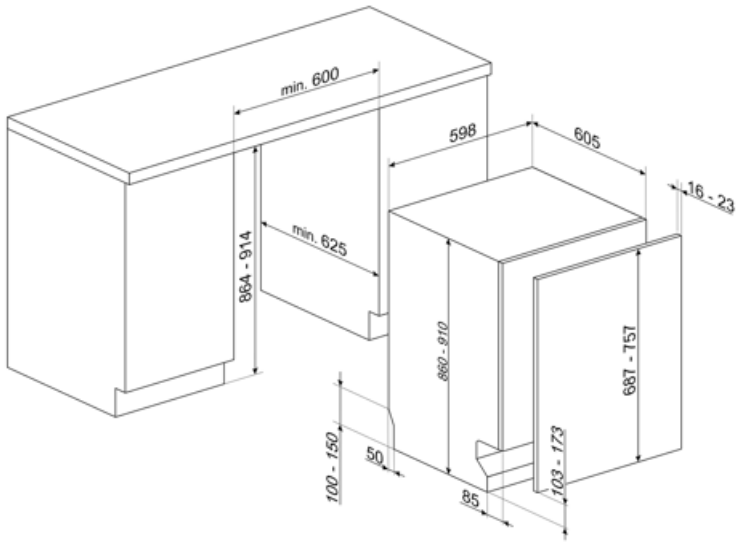

Symbols glossary



Acquastop: Some Smeg dishwashers are equipped with a simple Acquastop: float sensor in the bottom which is necesary to prevent an accidental leakage of water inside the appliance.



The Aquatest sensor is an electronic sensor that measures the degree of water transparency at the end of the initial soaking phase. ased on the values measured, the sensor sets the most suitable programme, thus obtaining the best washing results with the minimum amount of water.



Installation in column: Installation in column



Delay Timer: Option to postpone the start of the desired programme by up to 24 hours in order to programme the dishwasher to run at the desired time.



FlexiZone: The ½ load flexizone allows you to wash a reduced load saving energy, water and time and there are no restrictions on where the items are placed.



Hyclean: When the HYCLEAN option is selected, the dishwasher performs a final 10 minute rinse at a high temperature of 70°C, eliminating virtually all bacteria to achieve the highest possible standards of cleanliness. The Hyclean option can be selected with almost all cycles at temperatures above 50°C.



Smeg's evolution towards more intelligent and eco-friendly models has led to the choice of Inverter technology, which significantly reduces consumption.



Noise Level: Excellent insulation and special devices keep noise to a minimum.



Delicate: Delicate washing program is designed for delicate dishes which are not heavily soiled.



Delicate: Delicate washing program is designed for delicate dishes which are not heavily soiled.



PRG_RINSE_72dpi



PRG_STRONG_72dpi



15 place settings: Number of place settings.



EXTRA DRY This option adds a hot rinse cycle that ensures improved drying.



The Regular programme is for dishes with regular dirt, even with dried-on residues.



LIGHT SOILING Washing programme with low water and energy consumption.