DW9QSDXSA-1



Product Family	Dishwashers
Commercial width	60 cm
Commercial height	85 cm
Installation	Free-standing
N° baskets	3, FlexiDuo
Motor	Single phase
EAN code	8017709274078

Programs

N. of programmes	10+1	**Mix**	Yes
Washing temperatures	38, 45, 50, 65, 70 °C	**Quiet (-2 dB)**	Yes
Soak	Yes	**Intense**	Yes
Rapid 27'		**Self clean**	Yes
Express 27'	Yes	**Hygiene 99,9%**	Yes
Glass		**ECO Quick**	
Crystal	Yes	**Delicate and Quick**	
Full express - 60 minutes	Yes	**Normal Quick**	
		Strong and fast	
ECO	Yes	**Super**	
Auto sensor 45-65	Yes		

Options

Enersave option		**Options for tabs FlexiTabs**	
Dry Assist+ option	Yes	**Quick Time option**	
Delay timer option	Up to 24 hours	**Sanitizing option Hyclean**	
1/2 load FlexiZone option	Yes	**Special programs option**	Yes

Baskets

Basket colour	Grey
Basket components colour	Grey
Handle	In plastic with stainless steel insert on upper and lower basket
Upper Basket	With 3 foldable racks
Height adjustment of the upper basket	On three levels (5 cm)
Sliding Guides Extra Glide	Yes
Largest loadable dish in upper basket	19,0 cm
Lower Basket	With 4 foldable racks
Lower basket with anti-drip inserts	Yes
Largest loadable dish in lower basket	30,0 cm
Colour Inner Components	Blue

Technical Features



Width (mm)	598 mm
Depth (mm)	600 mm
Display type	LED display (3 digit)
Product Height (mm)	848 mm
Controls	Electronic
Display	Delayed start, Programme time indicator
Programme graphics	Symbols and label
On/off indicator	Yes
Salt light indicator	Light
Rinse aid indicator	Light
End of cycle indicator	Acoustic signal
Washing system	Planetarium
Third spray arm	Single
Water softener	With electronic setting
Turbidity sensor Aquatest	Yes
Flood protection system	Total Acquastop
Water supply	Single; cold/hot water max. 60°C - energysave with hot water up to 35%
Max water hardness	100°fH;58°dH
Drying system	Natural condenser drying, with EnerSave automatic door opening system at the end of the cycle
Tub material	Stainless steel
Filter	Stainless steel
Concealed heating element	Yes
Hinges	Self balancing with fixed hinges
Adjustable feet	Just for levelling
Back cover	Yes, with covered counterweight
Depth of dishwasher with open door (mm)	1168 mm
Removable top	Yes, with optional KIT

Electrical Connection

Connected power	1800 W
Current	13 A
Voltage	220-240 V
Frequency (Hz)	50 Hz
Type of connection	Single-phase
Power supply cable length	140 cm
Plug	(M) Sud Africa

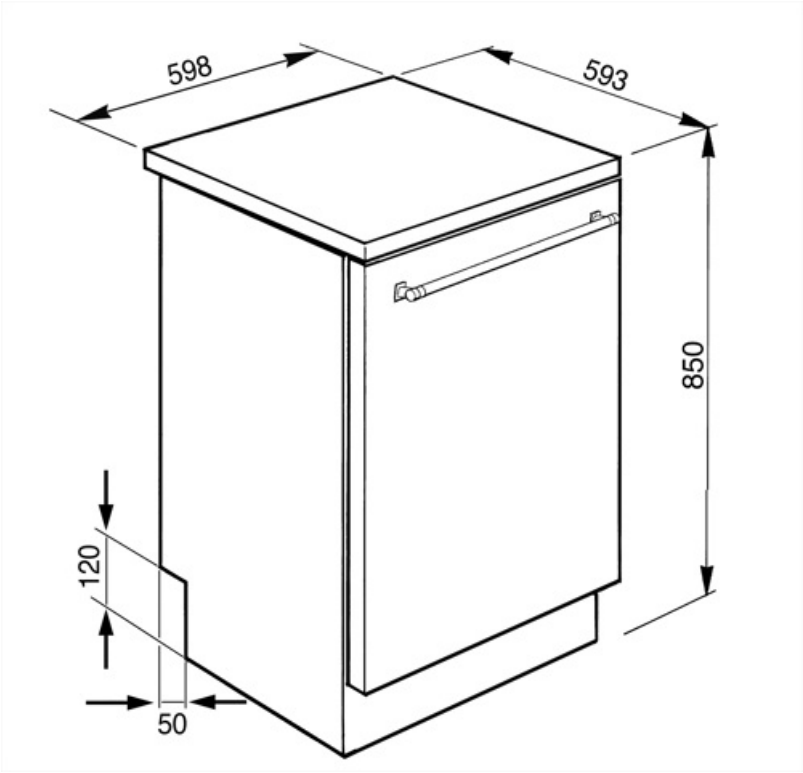
598
593
850
120
50

Compatible Accessories

KITGH

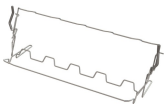

Kit glass holder. It has to be fitted on the first basket but only if there are foldable racks

KITINC

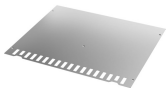

KITPLV2



Kit extension for dishwasher and washing machine: lenght mt. 2

Symbols glossary





The Aquatest sensor is an electronic sensor that measures the degree of water transparency at the end of the initial soaking phase. ased on the values measured, the sensor sets the most suitable programme, thus obtaining the best washing results with the minimum amount of water.



To improve the drying of dishes without leaving stains.



Delay Timer: Option to postpone the start of the desired programme by up to 24 hours in order to programme the dishwasher to run at the desired time.



FlexiDuo: The FlexiDuo 3rd cutlery basket allows you to arrange cutlery or small cups, ladles, or bulky utensils however you like: it consists of two separate and moveable modules.



FlexiZone: The ½ load flexizone allows you to wash a reduced load saving energy, water and time and there are no restrictions on where the items are placed.



The ExtraGlide guides system makes the second basket run even smoother and softer. It facilitates movement even when fully loaded, and thanks to the increased excursion, facilitates the insertion of dishes into the basket.



Noise Level: Excellent insulation and special devices keep noise to a minimum.



The Planetarium washing system, with high rotations per minute, guarantees complete coverage of the tank, thanks to the simultaneous rotation of base and sprayers, and excellent washing results.



Auto 45°- 65°: The auto programme regulates the length of a cycle depending on the need for a pre-wash and the number of rinses required.



Crystals: The Crystals programme is dedicated to delicate dishes such as glasses and china.



Eco: Eco, this economic wash programme uses a low amount of water and energy in order to provide the most environmentally friendly cleaning option.



Mix: The Mix programme is suitable for mixed crockery and everyday pots and pans, without any particular incrustation.



Soak programme: The soak programme provides a rinse to prevent dirt from drying.



Express 27': The Express 27' programme is a quick wash cycle, at low temperatures, for lightly soiled dishes.



Ultraclean: The Ultraclean option performs a final rinse at a high temperature of 70°c eliminating virtually all bacteria.



14 place settings: Number of place settings.



Total Acquastop: In addition to the partial Acquastop protection present in all Smeg dishwashers, some models have an electronic device fitted to the water intake hose, which monitors water levels in the machine, detects leaks in the hose and switches off the water supply immediately when necessary.



System WaterSave ensures the best washing results with minimal water consumption depending on the model of dishwasher.



Quick wash cycle for normally soiled mixed loads such as dishes and pans, even with dried-on residues. Dishes are washed and dried in 60 minutes.

Dishwasher cleaning cycle. The cycle should be started with the machine empty, without dishes. It is recommended to run the program every 2-3 months, using special dishwasher detergents.

Allows you to enable additional programs when selected together with any wash cycle.

HYGIENE 99.9% High-temperature washing programme. The 75° rinse guarantees the removal of 99.9% of germs and bacteria.

SILENT: Wash cycle suitable for normally soiled dishes, even with dried-on residues. Ensures maximum noise reduction and is therefore ideal if you wish to run it during the night.

The Dry Assist + option, in addition to saving energy, ensures perfect drying of the dishes by opening the door automatically at the end of the washing cycle.