DWAFI6315-4



Product Family	Dishwashers
Commercial width	60 cm
Commercial height	82 cm
Installation	Fully-integrated built-in
Kitchen panel	Not supplied
N° baskets	3, Flexi
Motor	Inverter
EAN code	8017709366537

Programs

N. of programmes	8	**ECO**	Yes
Washing temperatures	45, 50, 65, 70, 75 °C	**Auto sensor 45-65**	Yes
Soak	Yes	**Mix**	Yes
Crystal	Yes	**Self clean**	Yes
Express 50°	Yes	**Intense 60°**	Yes

Options

Delay timer option	Up to 24 hours	**Crystal option**	Yes
Extreme option	Yes		

Baskets

Basket colour	Grey	**Largest loadable dish in upper basket**	19,0 cm
Basket components colour	Grey	**Lower Basket**	With 4 foldable racks
Handle	In plastic with stainless steel insert on upper and lower basket	**Largest loadable dish in lower basket**	31.0 cm
Upper Basket	With 2 foldable racks	**Colour Inner Components**	Grey
Height adjustment of the upper basket	On two levels (4 cm)		

Technical Features



Width (mm)	596 mm
Depth (mm)	550 mm
Product Height (mm)	818 mm
Controls	Electronic touch control
Display	Delayed start, Programme time indicator, Time to end indication
Programme graphics	Symbols
On/off indicator	Yes
Rinse aid indicator	Light
End of cycle indicator	ActiveLight
Auto switch-off	Yes
Washing system	Standard
Third spray arm	Single
Turbidity sensor Aquatest	Yes
Flood protection system	Total Acquastop
Water supply	Single; cold/hot water max. 60°C - energysave with hot water up to 35%
Max water hardness	90°fH; 50°dH
Drying system	Natural condenser drying, with Dry Assist + automatic door opening system at the end of the cycle
Steam protection	In plastic
Tub material	Stainless steel
Filter	Stainless steel
Concealed heating element	Yes
Hinges	Self balancing, Sliding, FLEXIFIT
Min. and max. frontal panel weight	2 - 10 kg
Min. and max plinth height	0 - 220 mm
Adjustable feet	8 cm, da 818 a 898 mm
Airborne acoustical noise emissions dBA	44 dBA
Back cover	
Depth of dishwasher with open door (mm)	1230 mm
Back feet adjustable from front	Yes
Top cover	

Electrical Connection

Connected power	1800 W
Current	10 A
Voltage	220-240 V
Frequency (Hz)	50 Hz
Type of connection	Single-phase
Power supply cable length	140 cm
Plug	(I) Australia

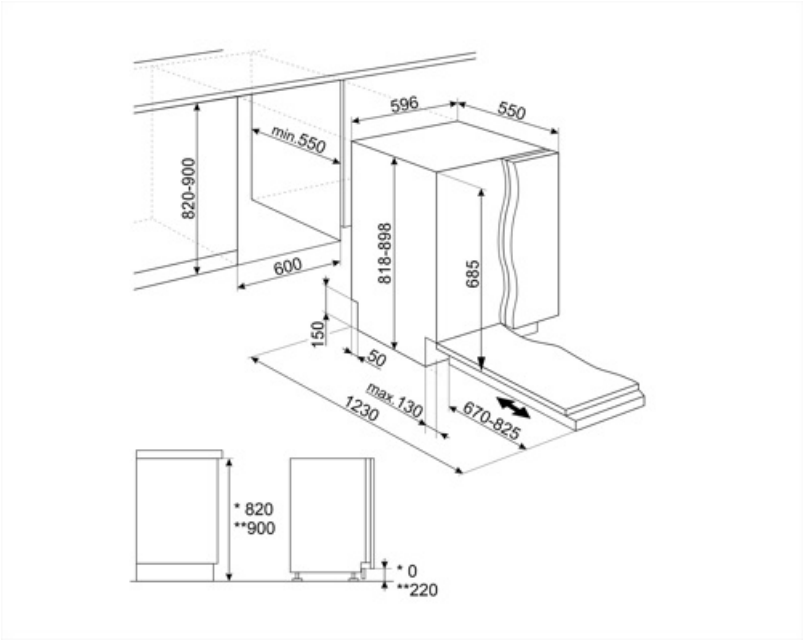
596
550
min.550
820-900
600
818-898
685
150
50
max.130
1230
670-825
* 820
**900
* 0
**220

Compatible Accessories



KIT82CN



KIT82CX



KIT82SPRAN



KIT82SPRMW



KIT82SPRX

Symbols glossary



Activelight is an led light which projects a red spot onto the floor beneath the dishwasher when the appliance is in use.



COMM_HEIGHT_82_72dpi



Option which improves the washing results of the selected programme. It increases the wash temperature and duration.



This option provides special care for a delicate load. It prevents rapid changes in the wash temperature of the selected programme and reduces it to 4



Noise Level: Excellent insulation and special devices keep noise to a minimum.



Auto 45°- 65°: The auto programme regulates the length of a cycle depending on the need for a pre-wash and the number of rinses required.



Eco: Eco, this economic wash programme uses a low amount of water and energy in order to provide the most environmentally friendly cleaning option.



Normal programme: The normal programme is suitable for normal degrees of dirt for everyday use.



The symbols show the number of plate settings of the dishwasher.



Touch controls: Easy to use touch controls allow the appliance to be programmed at the touch of a button.



Dishwasher cleaning cycle. The cycle should be started with the machine empty, without dishes. It is recommended to run the program every 2-3 months, using special dishwasher detergents.



Aquatest measures the clarity of the water during an auto program, and automatically ensures the minimum consumption of water and energy.



Delay Timer: The delay timer can postpone the start of the program by up to 24 hours.



Models with new Flexi Fit hinges are able to be installed in kitchens with a plinth of just 5cms. With this new hinge design, the panel has a sliding movement from the bottom to the top, avoiding any possible interference of the panel with the plinth.



Inverter technology: The evolution of Smeg's driers towards more intelligent and environmentally sustainable models has led to the choice of using Inverter technology with heat pumps, which reduces significantly energy consumption.



Noise Level: Excellent insulation and special devices keep noise to a minimum.



Crystals: The Crystals programme is dedicated to delicate dishes such as glasses and china.



...



Soak programme: The soak programme provides a rinse to prevent dirt from drying.



Total Acquastop: In addition to the partial Acquastop protection present in all Smeg dishwashers, some models have an electronic device fitted to the water intake hose, which monitors water levels in the machine, detects leaks in the hose and switches off the water supply immediately when necessary.



System WaterSave ensures the best washing results with minimal water consumption depending on the model of dishwasher.



Programme suitable for washing and drying heavily soiled items with encrusted residues.