FAB10HLWH5



Product Family	Refrigerator
Installation	Free standing
Category	One Door
Reference width	Until 60 cm
Reference height	Until 100 cm
Cooling type	Static
Defrost	Automatic
Hinge type	Standard
Hinge position	Left
EAN code	8017709298753

Aesthetics

Aesthetic	50's Style	**Handle type**	Fixed
Colour	White	**Handle colour**	Chrome
Design	Rounded	**Logo colour**	Chrome
Finishing	Glossy	**Side material**	Steel
Material	Heat-moulded	**Side colour**	White
Handle	External	**Logo**	Applied

Refrigerator compartment features

No. of adjustable shelves	2	**Internal light in fridge**	Yes
Shelves material	Glass	**Type of internal light (fridge)**	LED

Refrigerator Inner Door

Number of adjustable door shelves	2	**No. of bottle shelves**	1

Other Refrigerator features

Accessories	Bottle rack, Separatore lattine

Other technical features

Type of temperature control	Electro-mechanical
No. of compressors	1
Refrigerant gas type	R600a
Type of compressor	Standard
Refrigerant Quantity (g)	28 g
Foam agent	Cyclopentane

Performance / Energy Label - Reg. 2019



Annual energy consumption	88 kWh/a
Energy efficiency class	E
Airborne acoustical noise emission class	B
Total net volume	135 l
Sum of the volumes of the chill compartment(s) and the unfrozen compartment(s)	135 l
Airborne acoustical noise emissions	35 dB(A) re 1 pW
Climate class	SN, N, ST, T
EEI	96 %

Electrical Connection

Electrical connection rating	50 W
Current	0.35 A
Voltage (V)	220-240 V
Frequency (Hz)	50 Hz
Power supply cable length	180 cm
Plug	(F;E) Schuko

Logistic Information

Width	545 mm
Depth without handle	659 mm
Height	970 mm
Product width with maximum doors opening	842 mm
Product depth with handle	701 mm
Product depth with doors open at 90°	1085 mm

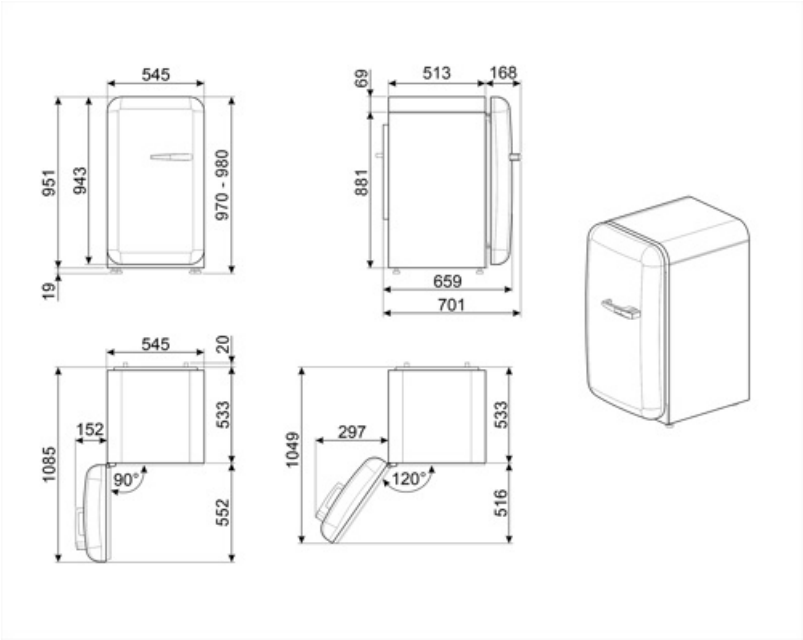
545
951
943
970 - 980
19
69
513
168
881
659
701
545
20
1085
152
533
90°
552
1049
297
533
120°
516

Alternative products



FAB10HLBL5

Hinge position: Left
Black



FAB10HLRD5

Hinge position: Left
Red



FAB10HLCR5

Hinge position: Left
Cream

Symbols glossary



A++: Energy efficiency class A++ helps to save up to 20% energy compared to class A. Maximum performance with minimum consumption is guaranteed.



The automatic defrost system works by automatically defrosting at regular intervals eliminating the need to defrost altogether.



LED interior lighting: is a more energy efficient and long lasting way of illuminating the interior of the appliance.



Energy efficiency class E