FAB10HRPK5

Product Family	Refrigerator
Installation	Free standing
Category	One Door
Reference width	Until 60
Reference height	Until 100
Cooling type	Static
Defrost	Automatic
Hinge type	Standard
Hinge position	Right
EAN code	8017709298012

Aesthetics

Aesthetic	50's Style	**Handle type**	Fixed
Colour	Pink	**Handle colour**	Chrome
Finishing	Glossy	**Logo colour**	Chrome
Design	Rounded	**Side material**	Steel
Material	Heat-moulded	**Side colour**	Cream
Handle	External	**Logo**	Applied

Refrigerator compartment features

No. of adjustable shelves	2	**Internal light in fridge**	Yes
Type of adjustable shelves	Glass	**Type of internal light (fridge)**	LED

Refrigerator Inner Door

Number of adjustable door shelves	2	**No. of bottle shelves**	1

Other Refrigerator features

Accessories	Bottle rack, Separatore lattine

Other technical features

Antibacterial Gasket	Yes
Type of temperature control	Electro-mechanical
No. of compressors	1
Refrigerant gas type	R600a
Type of compressor	Standard
Refrigerant Quantity (gr)	28 g
Foam agent	Cyclopentane

Performance / Energy Label NEW 2019

Annual energy consumption	88 kWh/a
Energy efficiency class	E
Airborne acoustical noise emission class	B
Total net volume	135 l
Sum of the volumes of the chill compartment(s) and the unfrozen compartment(s)	135 l
Airborne acoustical noise emissions	35 dB(A) re 1pW
Climate class	SN, N, ST, T
EEI	96 %

Electrical Connection

Plug	(F;E) Schuko
Electrical connection rating	50 W
Current	0,35 A
Voltage (V)	220-240 V
Frequency (Hz)	50 Hz
Power supply cable length	180 cm

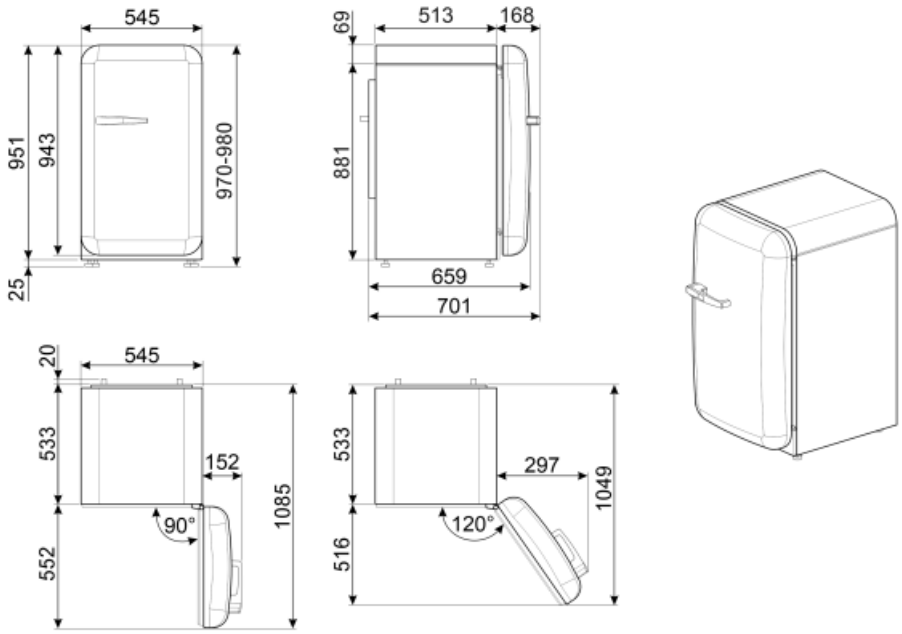
545
951
943
970-980
25
69
513
168
881
659
701
20
545
533
152
1085
90°
552
533
297
1049
120°
516

Symbols glossary (TT)

The automatic defrost system works by automatically defrosting at regular intervals eliminating the need to defrost altogether.

Energy efficiency class E

LED interior lighting: is a more energy efficient and long lasting way of illuminating the interior of the appliance.

Antibacterial treatment: antibacterial treatment to ensure better hygiene

A++: Energy efficiency class A++ helps to save up to 20% energy compared to class A. Maximum performance with minimum consumption is guaranteed.