FAB10HRPK6



Product Family	Refrigerator
Installation	Free standing
Category	One Door
Reference width	Until 60 cm
Reference height	Until 100 cm
Cooling type	Static
Defrost	Automatic
Hinge type	Standard
Hinge position	Right
EAN code	8017709342609

Aesthetics

Aesthetic	50's Style	**Handle type**	Fixed
Colour	Pink	**Handle colour**	Chrome
Design	Rounded	**Logo colour**	Chrome
Finishing	Glossy	**Side material**	Steel
Material	Heat-moulded	**Side colour**	Cream
Handle	External	**Logo**	Applied

Refrigerator compartment features

No. of adjustable shelves	2	**Internal light in fridge**	Yes
Shelves material	Glass	**Type of internal light (fridge)**	LED
No. of lights refrigerator compartment	1		

Refrigerator Inner Door

Number of adjustable door shelves	2	**No. of bottle shelves**	1

Other Refrigerator features

Accessories	Bottle rack, Separatore lattine

Other technical features

Type of temperature control	Electro-mechanical
No. of compressors	1
Refrigerant gas type	R600a
Type of compressor	Standard
Refrigerant Quantity (g)	28 g
Foam agent	Cyclopentane

Performance / Energy Label - Reg. 2019



Annual energy consumption	72 kWh/a	**Sum of the volumes of the chill compartment(s) and the unfrozen compartment(s)**	135 l
Energy efficiency class	D	**Airborne acoustical noise emissions**	35 dB(A) re 1 pW
Airborne acoustical noise emission class	B	**Climate class**	SN, N, ST, T
Total net volume	135 l	**EEI**	79 %

Electrical Connection

Electrical connection rating	50 W	**Frequency (Hz)**	50 Hz
Current	0,35 A	**Power supply cable length**	180 cm
Voltage (V)	220-240 V	**Plug**	(F;E) Schuko

Logistic Information

Width	545 mm	**Product width with maximum doors opening**	842 mm
Depth without handle	659 mm	**Product depth with handle**	701 mm
Height	970 mm	**Product depth with doors open at 90°**	1085 mm

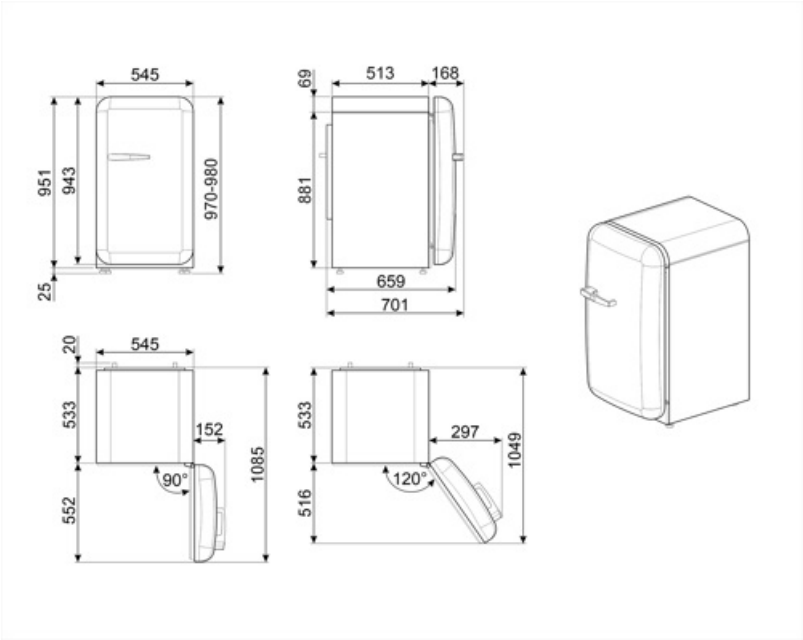
545
951
943
970-980
25
513
168
69
881
659
701
20
545
533
152
90°
1085
552
533
297
1049
120°
516

Alternative products



FAB10HRWH6

Hinge position: Right
White



FAB10HRPG6

Hinge position: Right
Pastel Green



FAB10HRPB6

Hinge position: Right
Pastel blue



FAB10HRDIT6

Hinge position: Right
Decorated / Special



FAB10HRCR6

Hinge position: Right
Cream



FAB10HRRD6

Hinge position: Right
Red



FAB10HRBL6

Hinge position: Right
Black

Symbols glossary



The automatic defrost system works by automatically defrosting at regular intervals eliminating the need to defrost altogether.



LED interior lighting: is a more energy efficient and long lasting way of illuminating the interior of the appliance.



Energy efficiency class D