FAB10HRRD5

Product Family	Refrigerator
Installation	Free Standing
Category	One Door
Reference width	Until 60
Reference height	Until 100
Cooling type	Static
Defrost	Automatic
Hinge type	Standard
Door opening flush with the wall	No
Slot-in	No
Hinge position	Right
Reversible door	No
EAN code	8017709297978

Aesthetics

Aesthetic	Estilo anos ‘50	**Handle colour**	Chrome
Colour	Red	**Logo colour**	Chrome
Acabamento	Brilhante	**Side material**	Steel
Design	Rounded	**Side colour**	Red
Material	Heat-moulded	**Logotipo**	Logotipo aplicado
Handle kit to be ordered separately	No	**Display**	No
		Dispenser	No
Handle	External	**HomeBar**	No
Handle type	Fixed		

Refrigerator compartment features

No. of adjustable shelves	2	**Life Plus zone-0°C**	No
Type of adjustable shelves	Glass	**Compartimento baixa temperatura**	No
Crisper Cover	No	**Internal light in fridge**	Yes
Bottle shelf	No	**Type of internal light (fridge)**	LED

Refrigerator Inner Door

Number of adjustable door shelves	2	**No. of bottle shelves**	1
Adjustable door shelves with wire support	No	**Bottle shelves with wire support**	No

Other Refrigerator features

Accessories	Bottle rack, Separador de latas	**Ionizer**	No
Natural Plus Blu Light	No	**Tecnologia de titânio**	No
MultiFlow	No	**Filtro de odor antibacteriano**	No
Fan	No	**Zona de cuidados biológicos**	No

Other technical features

Ligação à rede de água	No
Power on lamp	No
Temperature alarm lamp	No
Door open alarm	No
Temperature Alarm	No
Antibacterial Gasket	No
Type of temperature control	Electro-mechanical
No. of compressors	1
Refrigerant gas type	R600a
Type of compressor	Standard
Refrigerant Quantity (gr)	28 g
Espuma expansiva de isolamento	Ciclopentano

Etiqueta de Desempenho / Energia - Reg. 2019

Consumo de energia anual	88 kWh/a	**Soma dos volumes do(s) compartimento(s) refrigerado(s) e do(s) compartimento(s) não congelado(s)**	135 l
Classe de eficiência energética	E	**Airborne acoustical noise emissions**	35 dB(A) re 1 pW
Classe de emissão de ruído acústico aerotransportado	B	**Classe climática**	SN, N, ST, T
Volume líquido total	135 l	**EEI**	96 %

Electrical Connection

Plug	(F;E) Schuko	**Voltage (V)**	220-240 V
Electrical connection rating	50 W	**Frequency (Hz)**	50 Hz
Current	0,35 A	**Power supply cable length**	180 cm

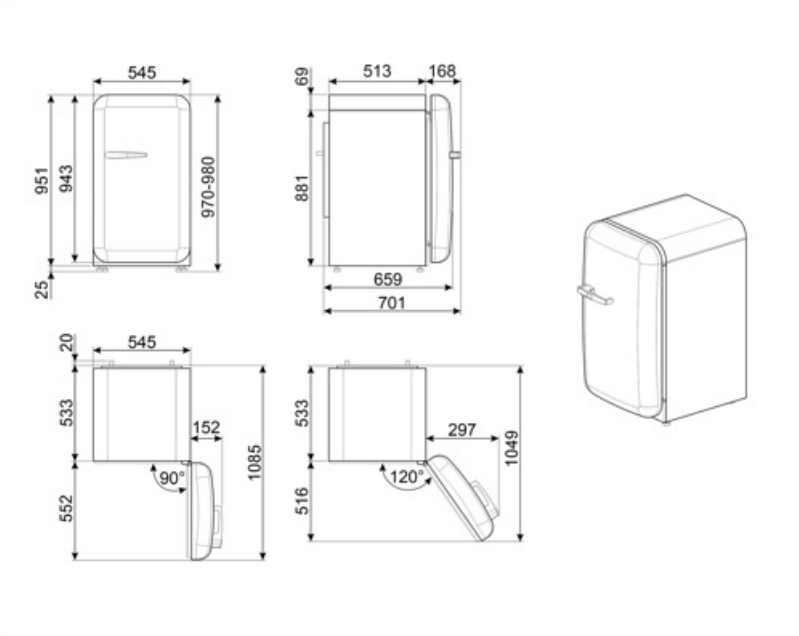
545
951
943
970-980
25
69
513
168
881
659
701
20
545
533
152
1085
90°
552
533
297
1049
120°
516

Alternative products

FAB10HRDIT5

Hinge position: Right
Decorated / Special

FAB10HRBL5

Hinge position: Right
Black

FAB10HRPB5

Hinge position: Right
Pastel blue

FAB10HRPK5

Hinge position: Right
Pink

FAB10HRWH5

Hinge position: Right
White

FAB10HRCR5

Hinge position: Right
Cream

FAB10HRPG5

Hinge position: Right
Pastel green

Symbols glossary

O sistema de descongelamento automático funciona descongelando automaticamente em intervalos regulares, eliminando a necessidade de descongelar completamente.

Iluminação interior LED: é uma forma mais eficiente em termos energéticos e duradoura de iluminar o interior do aparelho.

A++: A classe de eficiência energética A++ ajuda a economizar até 20% de energia em comparação com a classe A. O desempenho máximo com consumo mínimo é garantido.

Classe de eficiência energética E.

Benefit (TT)

Refrigerant gas R600a

Environmentally friendly R600a refrigerant gas contributes to rapid cooling with lower energy consumption

Climate class

Climatic class SN-T makes the appliance suitable for working at room temperature between 10 °C and 43 °C (50 °F ~ 109 °F)

External handle

The external handle ensures practicality and ease of use of the refrigerator

Refrigerator Internal lighting

Interior lighting for perfect visibility of shelves in the refrigerator compartment