FAB10LOR6



Product Family	Refrigerator
Installation	Free Standing
Category	One Door
Reference width	Until 60 cm
Reference height	Until 100 cm
Cooling type	Static
Defrost	Automatic for refrigerator, manual for freezer
Hinge type	Standard
Hinge position	Left
EAN code	8017709342425

Aesthetics

Aesthetics	50's Style	**Handle colour**	Chrome
Colour	Orange	**Logo colour**	Chrome
Design	Rounded	**Side material**	Steel
Finishing	Gloss	**Side colour**	Orange
Material	Heat-moulded	**Logo**	Applied
Handle	External	**Door shelves profile colour**	Silver
Handle type	Fixed	**Colour of glass shelf profile**	Silver

Refrigerator compartment features

Number of compartments	1	**Crisper Cover**	Yes
Compartment types	Fruit and vegetable compartment	**Type of crisper/vegetable drawers cover**	Glass
No. of adjustable shelves	1	**No. of lights**	1
Number of fruit and vegetables drawers	1	**Internal light in fridge**	Yes
Shelves material	Glass	**Type of internal light (fridge)**	LED
Type of crisper/vegetable drawers cover	Standard		

Refrigerator Inner Door

Number of adjustable door shelves	2	**No. of bottle shelves**	1

Freezer compartment features

Internal freezer compartment	Yes

Other technical features

Type of temperature control	Electro-mechanical
No. of compressors	1
Refrigerant gas type	R600a
Type of compressor	Standard
Refrigerant Quantity (g)	25 g
Foam agent	Cyclopentane

Performance / Energy Label



Annual energy consumption	115 kWh/year	**Noise level**	35 dB(A) re 1 pW
Energy efficiency class	D	**Thaw time**	6 h
Airborne acoustical noise emission class	B	**4 star - Freezing capacity**	2,6 kg/24h
Total volume	122 l	**Climatic class**	N, ST, T
Sum of the volumes of the frozen compartment(s)	17 l	**EEI**	79 %
Sum of the volumes of the chill compartment(s) and the unfrozen compartment(s)	105 l		

Electrical Connection

Nominal power	50 W	**Frequency (Hz)**	50 Hz
Current	0,42 A	**Power supply cable length**	180 cm
Voltage (V)	220-240 V	**Plug**	(F;E) Schuko

Logistic Information

Width (mm)	545 mm	**Product width with maximum doors opening**	842 mm
Depth without handle	659 mm	**Product depth with handle**	701 mm
Product Height with feet	970 mm	**Product depth with doors open at 90°**	1085 mm

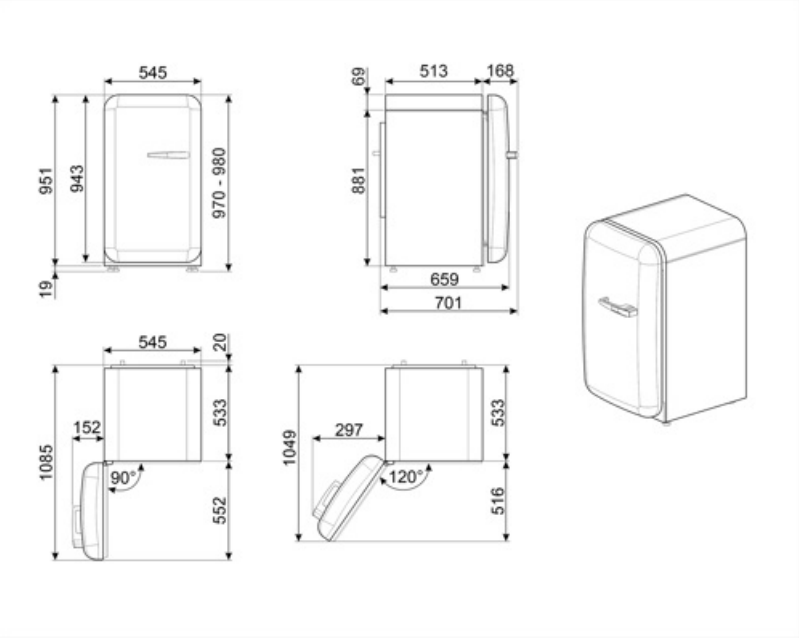
545
951
943
970 - 980
19
69
513
168
881
659
701
545
20
533
152
1085
90°
552
1049
297
533
120°
516

Alternative products



FAB10LCR6

Hinge position: Left
Cream



FAB10LWH6

Hinge position: Left
White



FAB10LBL6

Hinge position: Left
Black



FAB10LRD6

Hinge position: Left
Red

Symbols glossary



4 stars freezing compartment for better food preservation.



The automatic defrost system works by automatically defrosting at regular intervals eliminating the need to defrost altogether.



LED interior lighting: is a more energy efficient and long lasting way of illuminating the interior of the appliance.



Energy efficiency class D