# FAB38RWH5

| | |
|---|---|
| **Product Family** | Refrigerator |
| **Installation** | Free Standing |
| **Category** | Bottom Mount |
| **Reference width** | 60 - 70 |
| **Reference height** | Higher than 200 |
| **No-Frost system** | Total |
| **Cooling type** | Total No Frost - Double Cooling system |
| **Defrost** | Automatic |
| **Hinge type** | Standard |
| **Hinge position** | Right |
| **EAN code** | 8017709297923 |

## Aesthetics

| | | | |
|---|---|---|---|
| **Aesthetics** | 50's Style | **Side material** | Steel |
| **Colour** | White | **Side colour** | White |
| **Finishing** | Gloss | **Logo** | Applied |
| **Design** | Rounded | **Door shelves profile colour** | Silver |
| **Material** | Heat-moulded | **Drawers profile colour** | Silver |
| **Handle** | External | **Colour of glass shelf profile** | Silver |
| **Handle type** | Fixed | **Display** | LED |
| **Handle colour** | Chrome | **Display position** | Interior |
| **Logo colour** | Chrome | | |

## Refrigerator compartment features

| | | | |
|---|---|---|---|
| **No. of adjustable shelves** | 3 | **Type of crisper/vegetable drawers cover** | Glass |
| **Number of fruit and vegetables drawers** | 1 | **Life Plus zone-0°C** | Yes |
| **Type of adjustable shelves** | Glass | **Internal light in fridge** | Yes |
| **Type of crisper/vegetable drawers cover** | On sliding rails | **Type of internal light (fridge)** | LED |
| **Crisper Cover** | Yes | | |

## Refrigerator Inner Door

| | | | |
|---|---|---|---|
| **Number of adjustable door shelves** | 3 | **No. of bottle shelves** | 1 |

## Other Refrigerator features

| | | | |
|---|---|---|---|
| **MultiFlow** | Yes | **Fan** | Yes |

## Freezer compartment features

| | | | |
|---|---|---|---|
| **Number of drawers** | 2 | **No. of compartments with flap** | 1 |
| **No. of shelves** | 2 | **Type of shelves** | Glass |

## Other Freezer features

| | | | |
|---|---|---|---|
| **Manual ice maker** | Yes | **Fast freezing compartment** | Yes |
| **Ice maker** | Manual | | |

## Other technical features

| | |
|---|---|
| **Functions display** | Fast freezing, ECO, Temperature alarm |
| **Fast freezing button** | Yes |
| **Temperature alarm lamp** | Yes |
| **Door open alarm** | Acoustic and visual |
| **Temperature Alarm** | Yes |
| **Type of temperature control** | Electronic |
| **No. of compressors** | 1 |
| **Refrigerant gas type** | R600a |
| **Type of compressor** | Variable Speed Compressor |
| **Refrigerant Quantity (gr)** | 45 g |
| **Foam agent** | Cyclopentane |

## Performance / Energy Label NEW

| | | | |
|---|---|---|---|
| **Annual energy consumption** | 282 KWh/year | **Noise level** | 41 dB(A) re 1pW |
| **Energy efficiency class** | E | **Thaw time** | 14 h |
| **Airborne acoustical noise emission class** | C | **4 star - Freezing capacity** | 8 Kg/24h |
| **Total volume** | 481 l | **Climatic class** | SN, N, ST, T |
| | | **EEI** | 98 % |

| | |
|---|---|
| **Sum of the volumes of the frozen compartment(s)** | 137 l |
| **Sum of the volumes of the chill compartment(s) and the unfrozen compartment(s)** | 344 l |

## Electrical Connection

| | | | |
|---|---|---|---|
| **Plug** | (F;E) Schuko | **Voltage (V)** | 220-240 V |
| **Nominal power** | 127 W | **Frequency (Hz)** | 50/60 Hz |
| **Current** | 1,1 A | **Power supply cable length** | 180 cm |

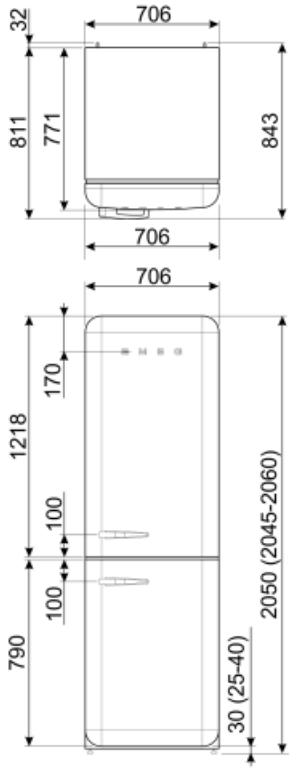


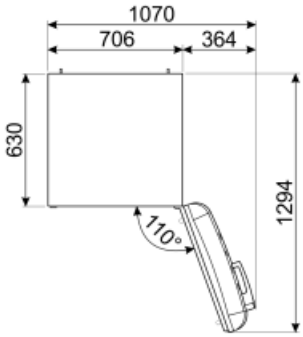


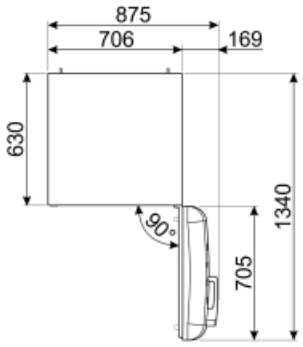

## Symbols glossary

4 stars freezing compartment for better food preservation.

LED display: to show programmes, functions and options selected and the time to the end of the cycle.

Energy efficiency class E

Ventilated: Forced distribution of cold air in the refrigerator compartment, which allows even temperature distribution within the fridge.

LED interior lighting: is a more energy efficient and long lasting way of illuminating the interior of the appliance.

Inverter technology: The evolution of Smeg's driers towards more intelligent and environmentally sustainable models has led to the choice of using Inverter technology with heat pumps, which reduces significantly energy consumption.

The automatic defrost system works by automatically defrosting at regular intervals eliminating the need to defrost altogether.

Economical mode: Analyzes fridge functioning during the activation and optimizes the operating cycle in order to reduce power consumption.

A++: Energy efficiency class A++ helps to save up to 20% energy compared to class A. Maximum performance with minimum consumption is guaranteed.

Fast freezing: The fast freezing function brings the temperature of the compartment down when activated a few hours prior to usage.

Life Plus 0°C: The temperature in the Lifeplus compartments is kept at 0°C, which preserves fresh meat and fish longer.

Air plus: keeps food fresher for longer.